AGENDA
HISTORIC PRESERVATION BOARD
Lakeland City Hall, City Commission Chambers
July 24, 2025, 8:30 A.M.

In accordance with the Americans with Disabilities Act and Section 286.26, Florida Statutes, persons with disabilities needing special accommodation to participate in this proceeding, or those requiring language assistance *(free of charge)* should contact the City of Lakeland ADA Specialist, Kristin Meador, no later than 48 hours prior to the proceeding, at (863) 834-8444, Email: ADASpecialist@lakelandgov.net. **If hearing impaired**, please contact the **TDD numbers**: Local – (863) 834-8333 or 1-800-955- 8771 (TDD-Telecommunications Device for the Deaf) or the **Florida Relay Service** Number 1-800-955-8770 (VOICE), for assistance.

Anyone deciding to appeal a decision by the Board on any matter considered at this or any subsequent meeting will need a record of the proceedings, and for purposes of that appeal, may need to ensure that a verbatim record of the proceedings is made, which record includes the testimony and evidence upon which the appeal is to be based.

I. Call to order, determination of a quorum, and roll call.

II. Review and approval of the June 26, 2025 Historic Preservation Board meeting minutes.

III. Old Business:

A. Historic Lakeland, Inc. Watch List Report
   i. 137 Lake Morton Drive
   ii. 2430 New Jersey Road*
   iii. 302 E. Belvedere Street *
   iv. 632 Easton Street*
   v. 2304 Carolina Avenue*

IV. New Business:

A. Lakeland Historic Districts Resurvey Phase 2 Update
B. Board Discussion regarding Local Landmark Designation

V. Adjourn for Design Review Committee.

*Not located within a Historic District; brief building histories provided to Board.

MINUTES

HISTORIC PRESERVATION BOARD
City Commission Chambers
Thursday, June 26, 2025
8:30 a.m.

(Please note: These meeting minutes comply with FS 286.011 and are not intended to be a verbatim transcript.)

The City of Lakeland Historic Preservation Board met in Regular Session; Bruce Anderson, Tracey Downey, Jason Hill, Natalie Oldenkamp, Cesar Perez, and Michael Porter were present. Community & Economic Development Department staff Emily Foster, Senior Planner, Historic Preservation and Christelle Burrola, Planning Assistant, and Katie Prenoveau, Assistant City Attorney, were also present.

I. Call to Order and Determination of a Quorum

Chair Dr. Bruce Anderson called the Thursday, June 26, 2025 meeting of the Historic Preservation Board ("Board") to order at 8:31 a.m. A quorum was reached, as five Board members were present. Mr. Cesar Perez was not present at the time attendance was taken.

II. Review and Approval of Previous Meeting Minutes

Ms. Natalie Oldenkamp motioned to approve the May 22, 2025 meeting minutes as presented. Ms. Tracey Downey seconded the motion. The motion passed 5—0.

III. Old Business:

A. Historic Lakeland, Inc. Watch List Report.
   i. 137 Lake Morton Drive
   ii. 2430 New Jersey Road*
   iii. 302 E. Belvedere Street *
   iv. 632 Easton Street*
   v. 2304 Carolina Avenue*
   vi. 716 College Street
   vii. 748 College Street

*Not located within a Historic District; brief building histories provided to Board

B. HPB Annual Review immediately following Design Review Committee meeting

IV. **New Business: NONE**

V. **Adjourn for Design Review Committee.**

The meeting adjourned at 8:42 a.m.

The Historic Preservation Board reconvened at 9:20 a.m. for the annual review presentation by staff. Ms. Foster presented an overview of the case statistics and completed projects for the 2024 calendar year, as well as Historic Preservation Program achievements and future HPB initiatives. The meeting adjourned at 9:52 a.m.

_____ _____
Chair, Historic Preservation Board Senior Planner, Historic Preservation

AGENDA

DESIGN REVIEW COMMITTEE
Lakeland City Hall, City Commission Chambers
July 24, 2025
immediately following the Historic Preservation Board Meeting

---

In accordance with the Americans with Disabilities Act and Section 286.26, Florida Statutes, persons with disabilities needing special accommodation to participate in this proceeding, or those requiring language assistance *(free of charge)* should contact the City of Lakeland ADA Specialist, Kristin Meador, no later than 48 hours prior to the proceeding, at (863) 834-8444, Email: ADASpecialist@lakelandgov.net. **If hearing impaired**, please contact the **TDD numbers**: Local – (863) 834-8333 or 1-800-955- 8771 (TDD-Telecommunications Device for the Deaf) or the **Florida Relay Service** Number 1-800-955-8770 (VOICE), for assistance.

Anyone deciding to appeal a decision by the Board on any matter considered at this or any subsequent meeting will need a record of the proceedings, and for purposes of that appeal, may need to ensure that a verbatim record of the proceedings is made, which record includes the testimony and evidence upon which the appeal is to be based.

I. Call to order, determination of a quorum, and roll call.

II. Review and approval of the June 26, 2025 Design Review Committee meeting minutes.

III. Review Certificates of Review administratively approved since the previous meeting.

IV. Consideration of Certificate of Review Applications:

A. Oath Administration for Public Testimony by Assistant City Attorney.

B. HPB25-116 – 413 W. Park Street – Final Approval requested to replace nine windows on the house at the subject address. Owner: Mr. Carlton Samuel. Applicant: Power Home Remodeling.

V. Other Business: NONE

VI. Adjournment.

MINUTES

DESIGN REVIEW COMMITTEE

City Commission Chambers

Thursday, June 26, 2025

(Note: These meeting minutes comply with F.S. 286.011 and are not intended to be a verbatim transcript.)

The City of Lakeland Historic Preservation Board's Design Review Committee met in Regular Session; Bruce Anderson, Jason Hill, Natalie Oldenkamp, Cesar Perez, and Michael Porter were present. Historic Preservation Board member Tracey Downey was also present. Community & Economic Development Department staff Emily Foster, Senior Planner, Historic Preservation, Christelle Burrola, Planning Assistant, and Katie Prenoveau, Assistant City Attorney, were also present.

I. Call to Order and Determination of a Quorum

The meeting was called to order by Chair Michael Porter at 8:43 a.m. The Committee roll call was performed and a quorum was present.

II. Review and Approval of the Previous Meeting Minutes

Dr. Bruce Anderson made a motion to approve the May 22, 2025 minutes as presented. Ms. Oldenkamp seconded the motion. The motion passed 5—0.

III. Review of Certificates of Review administratively approved.

A list of twelve (12) administratively approved Certificate of Review projects covering the period 5/16/25-6/18/25 was included with the agenda packet. There were no additional questions or comments about these projects.

IV. Consideration of Certificate of Review Applications:

A. Oath Administration for Public Testimony by Assistant Attorney Katie Prenoveau.

B. **HPB25-093 – 155 Lake Morton Drive** – Final Approval requested to modify three window openings on the house at this address to accommodate a new outdoor patio area. Owner: Ms. Katherine Schichtel. Applicant: Mr. Dan Fowler.

Chair Porter introduced the request and then asked if there were any conflicts of interest pertaining to this agenda item. There were no conflicts.

Ms. Emily Foster presented the staff report, stating the subject property is located along the southern portion of Lake Morton Drive near Success Avenue and consists of a parcel that is 0.39 acres in area. On this lot is a single-family house in the Neoclassical architectural style that was built in 1947 and is a contributing building in the South Lake Morton Historic District as of the 2022-23 resurvey. This is a revision to the previously approved exterior alteration to the east side wing of the house approved under Certificate of Review HPB24-181. This project consisted of the construction of a new brick patio wrapping around the east and north sides of the home's kitchen and dining areas within the east side wing and included the removal of part of the east (secondary facade) kitchen wall and windows and installing folding glass doors. This project received approval under Minor Review, as the alterations were proposed to a secondary façade and the house was mistaken as a non-contributing resource at the time of review. Under this revised proposal, the new patio wrapping around the east and north sides of the home's kitchen and dining rooms will remain the same as the first proposal. Where previously most of the east wall was to be opened and folding glass doors installed, this request proposes to remove the east side window openings, convert one opening to a pair of French doors, and install an adjacent bank of casement windows. In addition, the north facing window on this wing is proposed to be widened

and new casement windows installed. The intent is to allow more light into the renovated kitchen, as well as provide as much vision out as possible. The new doors and windows will have dividing muntins in keeping with the aesthetic of the existing windows and home.

Ms. Foster stated that the request was evaluated using Secretary's Standards #2, #9, #10 and Chapter 6 of the Design Guidelines for Historic Properties. While the removal or alteration of an original window opening is not recommended by the Design Guidelines, staff finds the request will not adversely affect the overall architectural character of the subject house, as the window openings are located on a side wing of the house, mostly on the secondary façade, and the property is screened by a tall pierced-brick wall. Additionally, the replacement windows and French doors continues the symmetrical fenestration pattern of the house. Ms. Foster stated staff recommends final approval of the request as submitted.

Chair Porter asked if the applicant had any additional comments or questions. Mr. Dan Fowler was present in support of the request. Mr. Fowler had no additional comments or questions.

MOTION: Final approval of the request as submitted. (B. Anderson/N. Oldenkamp, 5—0)

C. **HPB25-109 – 1137 Dorothy Street** – Final Approval requested to construct a new single-family house at this address. Owner: Mr. William R. Noah. Applicant: Trotter Construction LLC.

Chair Porter introduced the request and then asked if there were any conflicts of interest pertaining to this agenda item. There were no conflicts.

Ms. Emily Foster presented the staff report, stating the subject property a historically platted lot in the Lake Hunter Terrace Historic District and consists of 0.15 acres; this lot is currently vacant and has alley access at the rear (north side) of the property. The Applicant requests to build a one-story, single-family house on the subject property with 1,820 square feet of living area. The home will feature a neo-traditional aesthetic reflecting elements of the Frame Vernacular architectural style, such as a side-gabled main roof and gabled front porch supported by square columns, windows with a four-over-four lite configuration, a front entry displaying a full-lite front door, gable fretwork, and asymmetrical composition. The house plan features an integrated porch on the left-side elevation of the house and an attached garage on the rear elevation, which will be accessed from the alley at the rear of the lot. Materials proposed for the new house include:

- Concrete stem wall foundation with stucco cladding
- Fiber-cement lap siding, trim, and casing
- Vinyl single-hung sash windows with 4-inch mullions between paired/grouped windows
- Material TBD; full-lite front door and French doors at side porch; typical garage door
- Asphalt shingles on 5/12 pitch roof.
- Fiber-cement fascia and vented soffit and gable fretwork
- Concrete floor and steps; Fiber-cement-wrapped columns

The site plan proposed for the proposed new construction shows orientation of the home's front façade towards Dorothy Street. The proposed building setbacks and porch depth for the house meet the Land Development Code's Urban Neighborhood Standards. However, for compatibility with the front yard setbacks of adjacent properties, the front yard setback should be moved from 17 feet to 24 feet. (848 S. Central Ave = 24 feet; 1138 Dorothy Street = 29 feet; 1125 Dorothy Street; 1117 Dorothy Street = 24 feet)

Ms. Foster stated that the request was evaluated using Secretary's Standards #2, #5, #9, and Chapter 6 of the Design Guidelines for Historic Properties. Adjacent to the subject property along Dorothy Street exist several one-story houses that exhibit the Bungalow, Frame Vernacular, Mediterranean Revival, and Masonry Vernacular styles. Staff finds that the proposed new house is compatible in massing and scale to contributing Frame Vernacular and Bungalow houses found

throughout the Lake Hunter Terrace Historic District. The scale and proportion of the architectural elements of the house, including roof pitch and floor-to-ceiling heights, is also compatible with adjacent structures. Staff finds that the proposed materials are consistent with residences in the surrounding neighborhood and the Design Guidelines. The design of the house displays a neo-traditional style that is compatible with the architectural character of the Lake Hunter Terrace neighborhood, as well as the Design Guidelines. Finally, the proposed placement of the house on the lot is consistent with the Design Guidelines and Urban Neighborhood Standards in terms of orientation, building setbacks, and porch depth. As stated in the staff report, however, the front yard setback should be moved from 17 feet to 24 feet for compatibility with the front yard setbacks of adjacent properties along Dorothy Street.

Ms. Foster stated staff recommends approval of the request with the following conditions, to be reviewed and approved by staff prior to permitting:

1. Windows must be recessed to provide a shadow line and not installed flush to the exterior wall surface. Window muntins must be dimensional and mounted to the exterior glass.
2. The foundation must be elevated for a minimum of 21-inches above grade.
3. Fiber-cement lap siding shall have an exposure of no greater than 6-inches.
4. Revise the front yard setback from 17 feet to 24 feet.
5. Submittal of an exterior paint palette.

Chair Porter asked if the applicant had any additional comments or questions. Mr. Blayne Trotter, representing the applicant, was present in support of the request. Mr. Trotter had no additional comments or questions.

In response to Chair Porter, Mr. Trotter stated he is in agreement with staff's recommendation.

Discussion ensued among the Board and applicant regarding the columns and gables on the home.

In addition to staff recommendations, the Board discussed adding the following conditions:

1. Remove side porch columns
2. Remove windows and faux beams in front porch gable
3. A triangular vent may be used in the gable

MOTION: Final approval of the request with conditions as recommended by staff with the additional conditions. (B. Anderson/J. Hill, 5—0)

V. Other Business: NONE

VI. Adjournment: There being no further business, the meeting was adjourned at 9:09 a.m.

Chair, Design Review Committee

Senior Planner, Historic Preservation

iMS

Certificates of Review

Date Approved from 6/17/2025 to 7/17/2025

Number Location Description	Milestone	Approved
Historic Preservation (16)		
Minor Review (16)		
HPB25-113 1110 SUCCESS AVE, LAKELAND, FL 33803 New fence installation in back and side yard of the subject property. 200 linear feet of fence. 6 ft tall white privacy vinyl fence installation in the non visible (from Success Ave) area of our back yard. 6 ft tall wooden fence installation in the visible (from Success Ave) area of yard.	Certificate of Review Issued	06/17/25
HPB25-114 1813 PAWNEE TRL, LAKELAND, FL 33803 Polk County Window and Door will be replacing 1 window in the back of the home that will be 3 over 1 divided lite with grids on the exterior glass. The window will be the same window as in the front of the house but this one will be in the back of the house. The door in question is the Back door of the house next to the window the is being replaced. Nothing is being replaced in the front of the house.	Certificate of Review Issued	06/24/25
HPB25-118 1122 FLORIDA AVE S, LAKELAND, FL 33803 Install non-illuminated Southside Package & Lounge wall sign, 35 SF in area, on the west elevation wall of subject building.	Certificate of Review Issued	06/24/25
HPB25-119 732 PARK HILL AVE, LAKELAND, FL 33801 Installation of a 10' X 16' (160 SF) Heartland Hillsdale gable roof shed in rear yard of subject property. The shed will be painted to match house on property and roofing shingles for the shed will compliment the shingles on the house.	Certificate of Review Issued	06/24/25
HPB25-117 1119 FLORIDA AVE S, LAKELAND, FL 33803 Install “Black Swan Tattoo” Wall Sign. 22.18 SF wall sign consisting of 1/4" aluminum flat cut out letters painted white and stud mounted to exterior wall. Non-lighted.	Certificate of Review Issued	06/25/25
HPB25-120 801 MAIN ST E, LAKELAND, FL 33801 Construction of a dumpster enclosure for Grievous Angel restaurant at the west side of the subject property. Dumpster enclosure will be masonry block walls with wood grain texture on 1’ x 6’ Hardie board doors.	Certificate of Review Issued	06/25/25
HPB25-121 114 BELMAR ST E, LAKELAND, FL 33803 Install 158' of 6' High black chain link fence & 1 - 12' wide Double Swing Gate on subject property. Temporary fence to secure property owned by the Lakeland CRA.	Certificate of Review Issued	07/02/25

HPB25-122 Certificate of Review Issued 07/02/25

110 BELMAR ST E, LAKELAND, FL 33803

Install 168' of 6' High Black Chain Link Fence on subject property. Temporary fence to secure property owned by the Lakeland CRA.

HPB25-123 Certificate of Review Issued 07/02/25

1132 FLORIDA AVE S, LAKELAND, FL 33803

Install 187' of 6' high black chain link fence on subject property. Temporary fence to secure property owned by the Lakeland CRA.

HPB25-124 Certificate of Review Issued 06/30/25

324 MAXWELL ST W, LAKELAND, FL 33803

Build back deck (approx. 345 sq ft) at the rear of the house with composite construction, Timber Tech Harvest Collection, color BROWNSTONE, picket style railing (approx. 40 linear ft.), two sets of steps with 36” openings and wide / shallow steps and railing both sides.

HPB25-125 Certificate of Review Issued 07/01/25

809 SUCCESS AVE, LAKELAND, FL 33801

Replacing existing 6 ft. tall wood fence with a new 6 ft. tall wood fence, maintaining a 3 ft. setback from the alley, in the rear and side yards of subject property.

HPB25-128 Certificate of Review Issued 07/08/25

35 LAKE MORTON DR, LAKELAND, FL 33801

Building has experienced normal wear and tear to the exterior. Proposed Work includes repairs to stucco, enclosures and replacements of windows. All paint work to be incidental to core work. After stucco work and repairs, areas to be painted to match adjacent existing colors. Sealing and remedial work will occur to in place items along with replacement windows. Please see drawings and description in Project Details tile. At minimum windows will be replaced in kind. Windows are mixture of modern aluminum and wood clad exterior windows with applied wood mullions at the interior. It has been determined through research that certain windows have changed configuration and function since building was built. Where feasible economically and with modern systems in place, proposed work will return those windows to the same configurations and/or function.

HPB25-131 Certificate of Review Issued 07/17/25

1043 LEXINGTON ST, LAKELAND, FL 33801

Remove all (17) existing wood windows, reframe, and replace with new windows size for size, matching 9-lite Prairie style upper sashes. Justification was provided for replacing historic windows.

HPB25-132 Certificate of Review Issued 07/11/25

846 ORANGE ST E, LAKELAND, FL 33801

Remove existing shingle roof system on the main house and replace with 26 ga 5V crimp flat panel metal.

HPB25-135 Certificate of Review Issued 07/16/25

1927 CHEROKEE TRL, LAKELAND, FL 33803

Constructing an attached open (8’x46’) aluminum awning over pool deck attaching to rear detached garage- not the main house structure.

HPB25-134 Certificate of Review Issued 07/16/25

1034 MISSISSIPPI AVE, LAKELAND, FL 33803

Replace existing 15-lite front door with a 9-lite Prairie style fiberglass door, matching size of opening (FL#20461.11). This house has Prairie style 9-lite upper sash windows.

Total Planning Projects Approved: 16

HISTORIC PRESERVATION BOARD
DESIGN REVIEW COMMITTEE
STAFF REPORT
July 24, 2025

Project #	**HPB25-116**
Project Type	**Replacement Windows**
Property Address; Historic Name	**413 W. Park Street; The Thomas and Sallie Blythe House (CD 1934)**
Historic District; FMSF#	**Dixieland Historic District; #DL 347**
Owner/Applicant	**Samuel Carlton / Power Home Remodeling**
Future Land Use; Zoning; Context District	**Residential Medium; RA-4; Urban Neighborhood**
Existing Use	**Residential**
Adjacent Properties	**Residential**
Previous Approvals	**N/A**

REQUEST

The Applicant requests approval to replace nine historic wood windows in the subject house.

SUMMARY OF BACKGROUND INFORMATION

The subject property consists of one lot in the Dixieland Subdivision (Block D, Lot 13) that is 0.15 acres in size. On this property is a one-story, single-family house built circa 1925, which is a contributing building in the Dixieland Historic District. The house exhibits the Craftsman Bungalow architectural style and features a gabled roof pierced by a brick chimney, a hipped roof front porch supported by square columns on stone plinths that has been enclosed, and a hipped roof porch on the rear of the house that also has been enclosed. Vinyl siding is present on the house.

Except for the enclosed front and rear porches that have non-historic aluminum and vinyl windows the historic wood windows in the house consist of: seven (7) double-hung sash windows with a three-over-one lite configuration and five (5) double casement windows with six lites each. Two casement windows are located on either side of the chimney and three casement windows are located in the kitchen on the east side elevation of the house. Four double-hung sash windows are located in the bedrooms on the west side elevation of the house.

The Applicant proposes to replace the historic wood windows according to the following, matching the existing window opening size:

1. Replace four (4) historic double-hung sash windows with single-hung sash vinyl windows. A simulated divided lite appearance with exterior grid matching the historic windows was not specified.
2. Replace all five (5) casement windows with fixed vinyl windows. A simulated divided lite appearance with exterior grid matching the historic windows was not specified.
3. The request also includes installation of a 3-inch-wide aluminum mullion between each paired and grouped windows (bedrooms and kitchen).

APPLICABLE GUIDLINES:

The Secretary of Interior's Standards for Rehabilitation ("Standards") and the City of Lakeland's *Design Guidelines for Historic Properties* ("Design Guidelines") are the basis for review per the City of Lakeland Land Development Code ("LDC"), Article 11: Historic Preservation Standards.

The following *Standards* apply to this project*:*

Standard #5. Distinctive materials, features, finishes, and construction techniques or examples of craftsmanship that characterize a property will be preserved.

Standard #9. New additions, exterior alterations, or related new construction will not destroy historic materials, features, and spatial relationships that characterize the property. The new works will be differentiated from the old and will be compatible with the historic materials, features, size, scale, and proportion, and massing to protect the integrity of the property and its environment.

Standard #10. New additions and adjacent or related new construction will be undertaken in such a manner that, if removed in the future, the essential form and integrity of the historic property and its environment would be unimpaired.

The following *Design Guidelines* apply to this project*:*
Chapter 6 Exterior Architectural Features: Alteration and Maintenance; Sub-Chapter 6.4 Windows and Shutters (for Contributing Buildings)

- Preserve original windows. Original windows should be repaired and restored, rather than replaced.
- Use clear replacement glass to repair broken panes. Do not use tinted, reflective, opaque, or other non-traditional glass types.
- Existing window trim, casing, and other decorative details contributing to the building's character should be preserved. Any replacement of trim, casing and other decorative details surrounding the window must use the same or similar material of the same design, profile, and dimension.
- Window openings should be kept in the same proportion as originally provided. Window head heights should be consistent throughout the building. Avoid enlarging or diminishing window openings to fit air conditioning units.
- Replacement of original windows should only be considered in cases where original windows have deteriorated beyond reasonable repair. Conditions that constitute a repairable window include: missing or broken glass, meeting rails not aligning; cords broken or hardware missing; sill or frame rotted; and partially rotted rails and stiles that require patching. Conditions that constitute a window that is beyond reasonable repair include: missing components or units; extreme wood rot; where 50% or more of a window's components must be reconstructed.
- Replacement window requirements:
    - Window design should reflect the architectural style of the building (see Chapter 5: House Styles for window designs appropriate for specific architectural styles).
    - Must retain the opening size of the original window.
    - Must use the same type of window as the original. Double-hung sash windows may be replaced with a double-hung sash or single-hung sash window.
    - Must retain the same divided lite/pane pattern as the original window. Muntins/grids must be dimensional and mounted to the exterior glass, approximately of the same dimension as the original window;
    - Must be installed with a recess inside the casing of the window opening to produce a shadow line (flush installation is not permitted); box or block frame windows are recommended as fin/flange windows do not produce an adequate recess.
    - Double or grouped windows may not be separated by a standard mull bar and must be separated by a wood or similar material mullion of the same dimension as the original mullion.
    - Window must be trimmed out with wood or similar material of the same design, profile, and dimension as the original, including angled sill and top drip edge. It is recommended that the original window trim and casing be preserved.

- Non-historic windows such as jalousie, awning, and aluminum single-hung sash windows, may be replaced with windows that are typical for the architectural style of the building.
- Possible substitutes must be approved by the Historic Preservation Board.

ANALYSIS:

Typically, a request for window replacement requires only Minor Review (staff-level review) if the request is justified and complies with the Design Guidelines. Original windows are character-defining features of a historic building, and the removal of repairable historic windows and installation of inappropriate replacement windows can adversely affect the architectural integrity of a building.

Staff finds that the historic wood windows requested to be replaced are not deteriorated beyond repair and therefore, justification for their replacement is not met. The conditions of the windows that the Applicant provided in their letter dated June 18, 2025 constitute repairable windows according to the Design Guidelines. Additionally, the installation of a 3-inch-wide aluminum mullion between the paired and grouped windows is not appropriate as the aluminum mullion does not replicate the profile and dimensions of the historic wood mullions. Further, the proposed replacement windows do not match the divided lite appearance of the historic double-hung sash (three -over-one lite configuration) and casement (6-lite configuration) windows. For these reasons, staff recommends that the historic wood windows be repaired by a qualified window restoration professional instead of being replaced as requested.

STAFF RECOMMENDATION:

Denial of the request as submitted.

Report prepared by: Emily Foster, Senior Planner, Historic Preservation
Liaison to the Historic Preservation Board

Project # _____

Install Date _____

H.O.A ____ Yes____ No____ Push____

Financing Power____ Own_____

Carlton, Samuel
Carlton, Kate
413 West Park Street
Lakeland, FL 33803

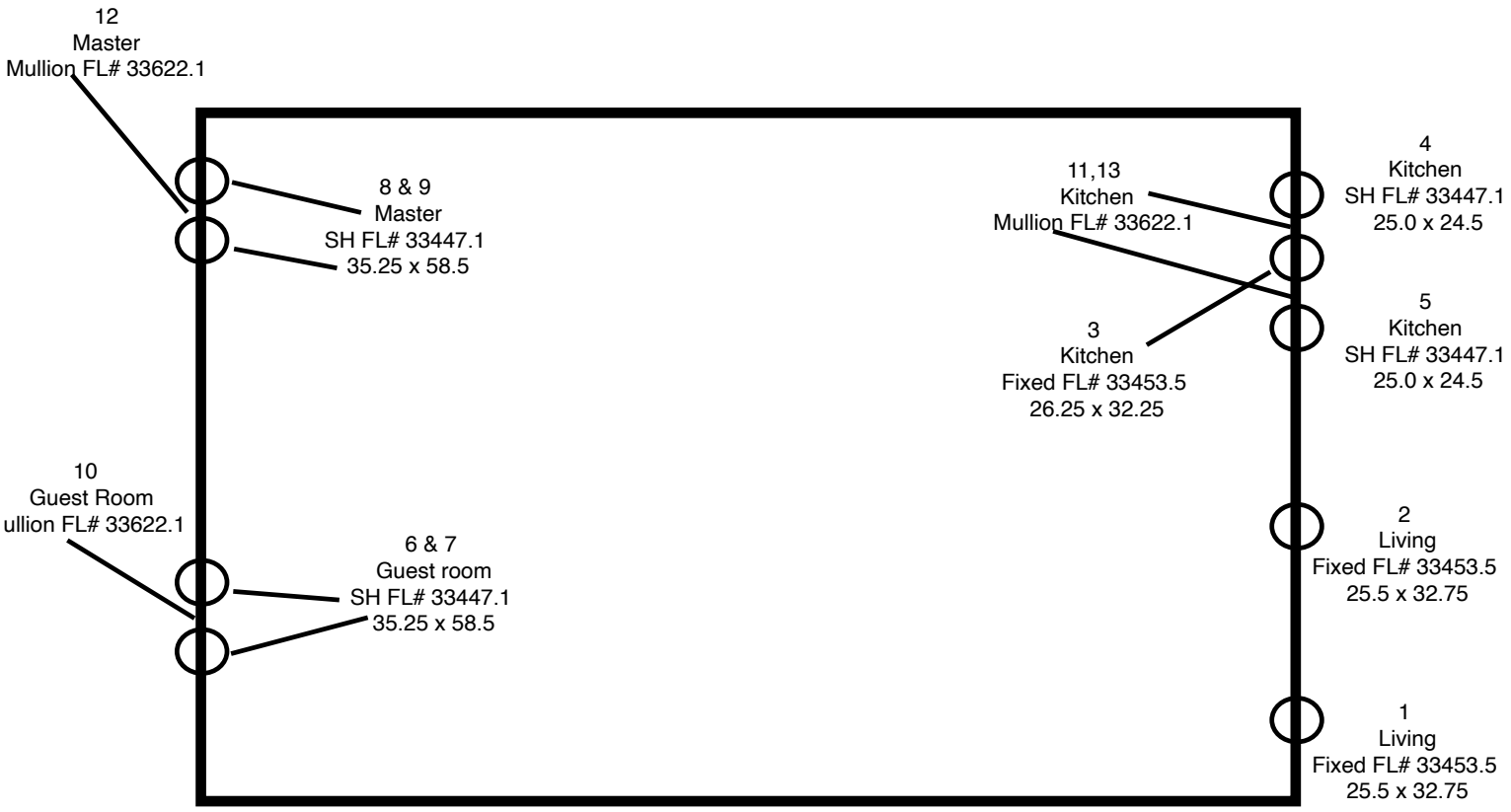

TO: CITY OF LAKELAND HISTORIC PRESERVATION BOARD

FROM: EDWARD GILBERT, POWER HOME REMODELING (CRC 1333662)

SUBJECT: BLD25-03264 / HPB25-098 /// 413 West Park Street

TO WHOM IT MAY CONCERN:

I am writing to respectfully request approval for the replacement of the existing windows at 413 West Park Street within the Historic District of Lakeland. We understand and appreciate the importance of preserving the architectural integrity of historic homes here at Power Home Remodeling; however, there are several compelling reasons we believe this request is both justified and in the best interest of the property and its preservation.

1 **Front Windows**: The front-facing windows of the home currently consist of aluminum—a clear indication that modifications have previously been made that are not historically accurate. This sets a precedent and shows that the current windows do not fully reflect the original architectural character.

2 **Vinyl Siding:** The home's existing siding represents a significantly larger alteration to its historical appearance than the proposed window replacements. In contrast, our proposed windows are designed to complement and preserve the home's appearance while vastly improving functionality and safety.

3 **Energy Inefficiency and Heat Exposure**: We have documented interior temperature readings ranging from 95 to 105 degrees near the current windows due to their poor insulation and single pane glass. This energy inefficiency places a significant financial burden on the homeowner and affects their quality of life.

4 **Wood Rot and Structural Concerns**: There is substantial wood rot and visible gaps around several window frames, compromising both structural integrity and safety. In some areas, the window sashes and frames are deteriorating to the point where further damage is inevitable if not addressed promptly.

5 **Safety and Functionality Hazards**: Three windows currently have shattered glass, and four bedroom windows are completely sealed shut, violating basic safety standards. These windows cannot serve their intended emergency egress function and pose a serious risk to the homeowner.

6 **Cost-Effective and Professional Assessment**: Based on our professional evaluation, the cost of properly repairing and rehabilitating the current windows, considering the extent of the rot, structural issues, and safety concerns, would be significantly higher than replacing them with our proposed energy-efficient, historically compatible products.

We are proposing window replacements that are high-quality, historically appropriate in appearance, and engineered for modern efficiency and safety. Our goal is to restore the home in a way that honors its historical character while ensuring it remains livable and secure for generations to come.

SINCERELY,

EAG

Edward Gilbert
Vice President of Installations- Power Home Remodeling
610.874.5000 x 4016
egilbert@powerhrg.com

State of Florida County of Hillsborough
Sworn to (or affirmed) and subscribed before me via X physical presence OR ___ online notarizations this 18 day of June , 2025.

By Edward Gilbert who is X personally known OR_____ produced identification _____

Notary Name: Matthew Moyer Commission Expires: 6/14/27

Notary Public State of Florida
Matthew Moyer
My Commission HH 410985
Expires 6/14/2027

FL #	FL33447-R1
Application Type	Revision
Code Version	2023
Application Status	Approved
Comments	
Archived	☐
Product Manufacturer	Pella Corporation
Address/Phone/Email	102 Main St. Pella, IA 50219 (641) 621-6096 pellaproductapproval@pella.com
Authorized Signature	Mary Rukashaza-Mukome certifications@cws.cc
Technical Representative	Mary Rukashaza-Mukome
Address/Phone/Email	102 Main Street Pella, IA 50219 (641) 621-3317 rukashazamc@pella.com
Quality Assurance Representative	Dave Criscuolo
Address/Phone/Email	1900 SW 44th Avenue Ocala, FL 34474 (647) 651-0199 dcriscuolo@cws.cc
Category	Windows
Subcategory	Single Hung
Compliance Method	Evaluation Report from a Florida Registered Architect or a Licensed Florida Professional Engineer ☐ Evaluation Report - Hardcopy Received
Florida Engineer or Architect Name who developed the Evaluation Report	Lucas A. Turner
Florida License	PE-58201
Quality Assurance Entity	Keystone Certifications, Inc.
Quality Assurance Contract Expiration Date	07/15/2030
Validated By	Steven M. Urich, PE ☑ Validation Checklist - Hardcopy Received
Certificate of Independence	FL33447_R1_COI_EvalReportPEL154B.pdf

Referenced Standard and Year (of Standard)

Standard	Year
AAMA/WDMA/CSA 101/I.S.2/A440	2017
PA TAS 202	1994

Equivalence of Product Standards
Certified By

Sections from the Code

Product Approval Method	Method 1 Option D
Date Submitted	10/05/2023
Date Validated	10/05/2023
Date Pending FBC Approval	10/08/2023
Date Approved	12/13/2023

Summary of Products

FL #	Model, Number or Name	Description
33447.1	SH-510	SH-510 Vinyl Flange/Fin Single Hung, Non-Impact
Limits of Use **Approved for use in HVHZ:** No **Approved for use outside HVHZ:** Yes **Impact Resistant:** No **Design Pressure:** +50/-50 **Other:** SH-510, Max. size 53.125" x 76". Glass complies with ASTM E1300.		**Installation Instructions** FL33447_R1_II_PEL-154B.pdf Verified By: Lucas A. Turner 58201 Created by Independent Third Party: Yes **Evaluation Reports** FL33447_R1_AE_EvalReportPEL154B.pdf Created by Independent Third Party: Yes
33447.2	SH-510	SH-510 Vinyl Flange/Fin Single Hung, Non-Impact
Limits of Use **Approved for use in HVHZ:** Yes **Approved for use outside HVHZ:** Yes **Impact Resistant:** No **Design Pressure:** N/A **Other:** SH-510 Vinyl Single Hung, O/X, Max. size 52" x 71", see installation dwgs. for DP. Glass complies with ASTM E1300.		**Installation Instructions** FL33447_R1_II_PEL-485B.pdf Verified By: Lucas A. Turner 58201 Created by Independent Third Party: Yes **Evaluation Reports** FL33447_R1_AE_EvalReportPEL485B.pdf Created by Independent Third Party: Yes
33447.3	SH-510	SH-510 Vinyl Single Hung Oriel w/ HD Meeting Rail
Limits of Use **Approved for use in HVHZ:** No **Approved for use outside HVHZ:** Yes **Impact Resistant:** No **Design Pressure:** +60/-60 **Other:** SH-510, Max. size 52" x 96", Oriel. Glass complies with ASTM E1300.		**Installation Instructions** FL33447_R1_II_PEL-293B.pdf Verified By: Lucas A. Turner 58201 Created by Independent Third Party: Yes **Evaluation Reports** FL33447_R1_AE_EvalReportPEL293B.pdf Created by Independent Third Party: Yes
33447.4	SH-510 Continuous Head & Sill	SH-510 Vinyl Single Hung, Continuous Head & Sill, Non-Impact.
Limits of Use **Approved for use in HVHZ:** No **Approved for use outside HVHZ:** Yes **Impact Resistant:** No **Design Pressure:** N/A **Other:** SH-510 Cont. Hd. & Sill, Max. size 72 7/8" x 61 3/4", see Installation Dwgs. for DP. Glass complies with ASTM E1300.		**Installation Instructions** FL33447_R1_II_PEL-442B.pdf Verified By: Lucas A. Turner 58201 Created by Independent Third Party: Yes **Evaluation Reports** FL33447_R1_AE_EvalReportPEL442B.pdf Created by Independent Third Party: Yes
33447.5	SH-510 Continuous Head & Sill	SH-510 Vinyl Single Hung, Cont. Head & Sill, Non-Impact.
Limits of Use **Approved for use in HVHZ:** No **Approved for use outside HVHZ:** Yes **Impact Resistant:** No **Design Pressure:** N/A **Other:** SH-510 Cont. Hd. & Sill, Max. size 74 1/8" x 72", see chart on Installation Dwgs. for DP. Glass complies with ASTM E1300.		**Installation Instructions** FL33447_R1_II_PEL-492B.pdf Verified By: Lucas A. Turner 58201 Created by Independent Third Party: Yes **Evaluation Reports** FL33447_R1_AE_EvalReportPEL492B.pdf Created by Independent Third Party: Yes

Back Next

SINGLE HUNG - NON-IMPACT

(SHOWN w/DIFFERENT OPTIONS)

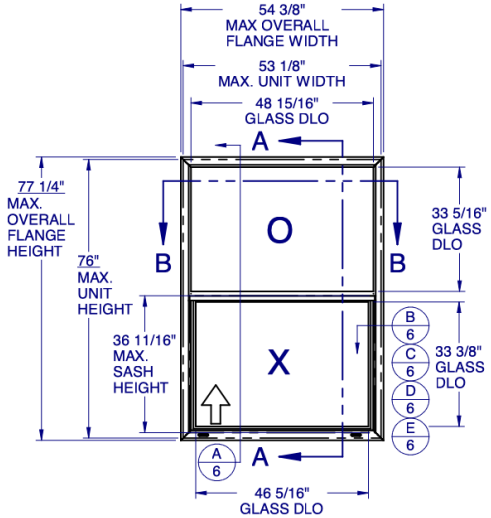

EQUAL SPLIT

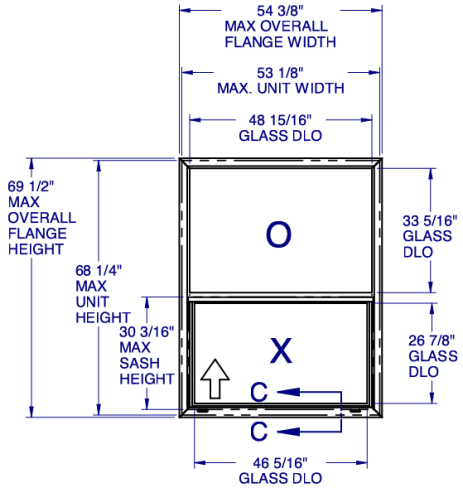

5 HI SASH ORIEL

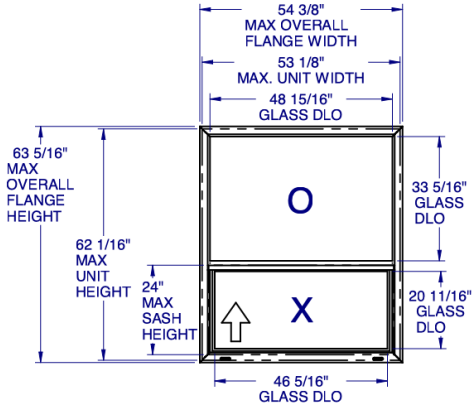

60/40 SPLIT ORIEL

TABLE OF CONTENTS

GENERAL NOTES & ELEVATIONS.....1
COMP. ANALYSIS & GLAZING DETAILS.....2
SECTION VIEWS.....3
BOM & EXTRUSIONS.....4
ANCHOR SCHEDULE & NOTES.....5
INSTALLATION DETAILS.....6

CONFIG.	MAX. UNIT SIZE	DESIGN PRESSURE RATING	IMPACT RATING
EQUAL	53-1/8" x 76"	SEE COMPARATIVE ANALYSIS CHART, SHEET 2	NONE
5 HI ORIEL	53-1/8" x 68-1/4"		NONE
60/40 ORIEL	53-1/8" x 62-1/16"		NONE

GENERAL NOTES:

1. THE PRODUCT SHOWN HEREIN IS DESIGNED AND MANUFACTURED TO COMPLY WITH THE FLORIDA BUILDING CODE (FBC), CURRENT EDITION.
2. GLAZING OPTIONS: (SEE SHEET 2)
3. CONFIGURATIONS: "O/X".
4. DESIGN PRESSURE RATING (SEE SHEET 2):
   -NEGATIVE DESIGN LOADS BASED ON, TESTED PRESSURE AND GLASS TABLES ASTM E-1300-04e01/09.
   -POSITIVE DESIGN LOADS BASED ON, TESTED PRESSURE, WATER INFILTRATION TEST PRESSURE AND GLASS TABLES ASTM E-1300-04e01/09.
5. ANCHORAGE: THE 33 1/3% STRESS INCREASE HAS NOT BEEN USED IN THE DESIGN OF THIS PRODUCT. SEE SHEET 6 FOR ANCHOR DETAILS. WINDLOAD DURATION FACTOR Cd=1.6 WAS USED FOR WOOD ANCHOR CALCULATIONS.
6. NOT APPROVED FOR IMPACT RESISTANCE. IMPACT PROTECTIVE SYSTEM IS REQUIRED IN WIND BORNE DEBRIS REGION.
7. ALL FRAMES AND VENTS FULLY WELDED. SMALL JOINT SEAM SEALANT USED AT FIXED MEETING RAIL AND JAMB.
8. SERIES / MODEL DESIGNATION SH-8100.
9. THE DESIGNATION X AND O STAND FOR THE FOLLOWING:
   X = OPERABLE SASH, O = FIXED SASH
10. SECTION CALLOUTS APPLY TO ALL ELEVATIONS IN A SIMILAR LOCATION.
11. EXTERNAL WEEP SLOT = 1/2" x 2-1/2" LOCATED 4" FROM BOTH ENDS.

Lucas Turner
2023.09.26
14:18:56
-05'00'

Pella Corporation
102 Main Street
Pella, IA 50219
www.pella.com

510 PVC SINGLE HUNG NON-IMPACT

PROPRIETARY AND CONFIDENTIAL
THE INFORMATION CONTAINED IN THIS DRAWING IS THE SOLE PROPERTY OF CUSTOM WINDOW SYSTEMS, INC. ANY REPRODUCTION IN PART OR AS A WHOLE WITHOUT THE WRITTEN PERMISSION OF CUSTOM WINDOW SYSTEMS, INC IS PROHIBITED.

FLORIDA APPROVAL NO.:
33447

LUCAS A. TURNER
LICENSE
No. 58201
STATE OF FLORIDA
PROFESSIONAL ENGINEER

9/26/2023

LUCAS A. TURNER, P.E.
FL PE # 58201
Turner Engineering & Consulting, Inc.
2428 Old Natchez Trc Trl
Camden, TN 38320
PH. 941-380-1574

SHEET DESCRIPTION:
GENERAL NOTES AND ELEVATIONS

DRAWN BY:	DATE:
MCS	9/19/2023
DWG #: PEL-154	REV.: B
SCALE: 1:33	SHEET 1 OF 6

Design Pressures (PSF) with Glass Types A, B, C, or D												
Unit	Sash	Unit Widths (in.)										
Heights (in.)	Heights (in.)	23 1/2	27 1/2	29 1/2	31 1/2	35 1/2	39 1/2	41 1/2	43 1/2	47 1/2	51 1/2	53 1/8
35 1/2	17	+50 / -75	+50 / -75	+50 / -75	+50 / -75	+50 / -75	+50 / -75	+50 / -75	+50 / -75	+50 / -75	+50 / -75	+50 / -75
39 1/2	19	+50 / -75	+50 / -75	+50 / -75	+50 / -75	+50 / -75	+50 / -75	+50 / -75	+50 / -75	+50 / -75	+50 / -75	+50 / -75
41 1/2	20	+50 / -75	+50 / -75	+50 / -75	+50 / -75	+50 / -75	+50 / -75	+50 / -75	+50 / -75	+50 / -75	+50 / -75	+50 / -73.1
43 1/2	21	+50 / -75	+50 / -75	+50 / -75	+50 / -75	+50 / -75	+50 / -75	+50 / -75	+50 / -75	+50 / -75	+50 / -73.4	+50 / -70.6
47 1/2	23	+50 / -75	+50 / -75	+50 / -75	+50 / -75	+50 / -75	+50 / -75	+50 / -75	+50 / -75	+50 / -75	+50 / -68.9	+50 / -66.2
51 1/2	25	+50 / -75	+50 / -75	+50 / -75	+50 / -75	+50 / -75	+50 / -75	+50 / -75	+50 / -75	+50 / -72.7	+50 / -65.2	+50 / -62.6
53 1/2	26	+50 / -75	+50 / -75	+50 / -75	+50 / -75	+50 / -75	+50 / -75	+50 / -75	+50 / -75	+50 / -71	+50 / -63.6	+50 / -61
55 1/2	27	+50 / -75	+50 / -75	+50 / -75	+50 / -75	+50 / -75	+50 / -75	+50 / -75	+50 / -75	+50 / -69.5	+50 / -62.1	+50 / -59.5
59 1/2	29	+50 / -75	+50 / -75	+50 / -75	+50 / -75	+50 / -75	+50 / -75	+50 / -75	+50 / -75	+50 / -66.8	+50 / -59.5	+50 / -57
63 1/2	31	+50 / -75	+50 / -72.9	+50 / -72	+50 / -71.6	+50 / -71.6	+50 / -71.6	+50 / -71.6	+50 / -71.6	+50 / -64.6	+50 / -57.3	+50 / -54.8
65 1/2	32	+50 / -73.2	+50 / -69.1	+50 / -68	+50 / -67.4	+50 / -67.3	+50 / -67.3	+50 / -67.3	+50 / -67.3	+50 / -63.6	+50 / -56.4	+50 / -53.9
67 1/2	33	+50 / -69.8	+50 / -65.6	+50 / -64.4	+50 / -63.7	+50 / -63.4	+50 / -63.4	+50 / -63.4	+50 / -63.4	+50 / -62.7	+50 / -55.5	+50 / -53
71 1/2	35	+50 / -64	+50 / -59.7	+50 / -58.3	+50 / -57.3	+50 / -56.5	+50 / -56.5	+50 / -56.5	+50 / -56.5	+50 / -56.5	+50 / -53.9	+50 / -51.5
74 3/4	36 5/8	+50 / -59.9	+50 / -55.6	+50 / -54.1	+50 / -53	+50 / -51.8	+50 / -51.7	+50 / -51.7	+50 / -51.7	+50 / -51.7	+50 / -51.7	+50 / -50.4
76	37 1/4	+50 / -58.5	+50 / -54.1	+50 / -52.6	+50 / -51.5	+50 / -50.2	+50 / -50	+50 / -50	+50 / -50	+50 / -50	+50 / -50	+50 / -50

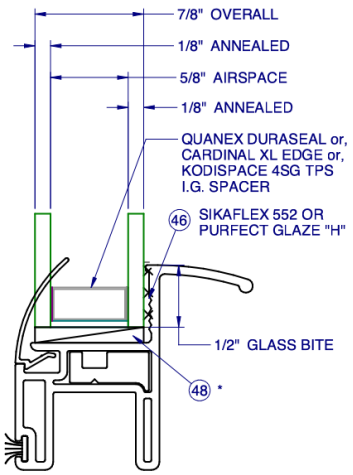

GLASS TYPE A

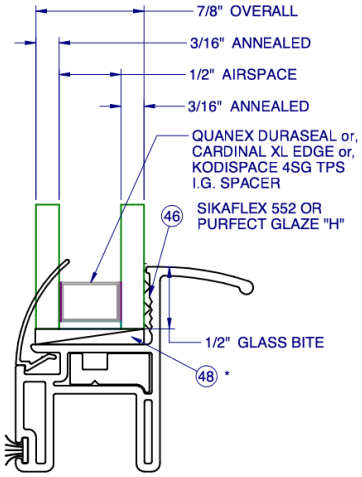

GLASS TYPE B

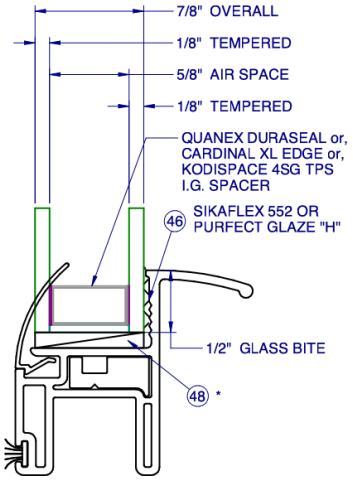

GLASS TYPE C

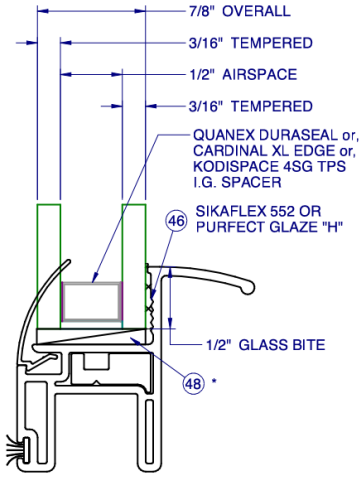

GLASS TYPE D

NOTE:

IF SIZE INTENDED IS NOT SHOWN, USE NEXT LARGER SIZE.

Pella Corporation
102 Main Street
Pella, IA 50219
www.pella.com

510 PVC SINGLE HUNG NON-IMPACT

PROPRIETARY AND CONFIDENTIAL
THE INFORMATION CONTAINED IN THIS DRAWING IS THE SOLE PROPERTY OF CUSTOM WINDOW SYSTEMS, INC. ANY REPRODUCTION IN PART OR AS A WHOLE WITHOUT THE WRITTEN PERMISSION OF CUSTOM WINDOW SYSTEMS, INC IS PROHIBITED.

FLORIDA APPROVAL NO.:
33447

9/26/2023

LUCAS A. TURNER, P.E.
FL PE # 58201
Turner Engineering & Consulting, Inc.
2428 Old Natchez Trc Trl
Camden, TN 38320
PH. 941-380-1574

SHEET DESCRIPTION:
COMPARATIVE ANALYSIS AND GLAZING DETAILS

DRAWN BY:	DATE:
MCS	9/19/2023
DWG #: PEL-154	REV.: B
SCALE: 1:1	SHEET 2 OF 6

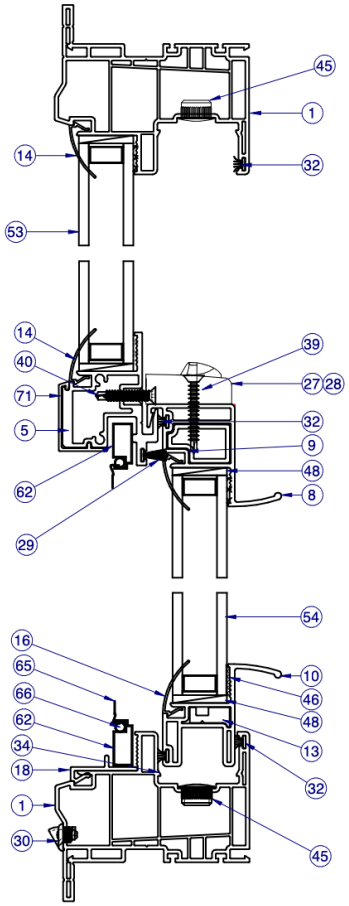

SECTION A-A

INTERIOR

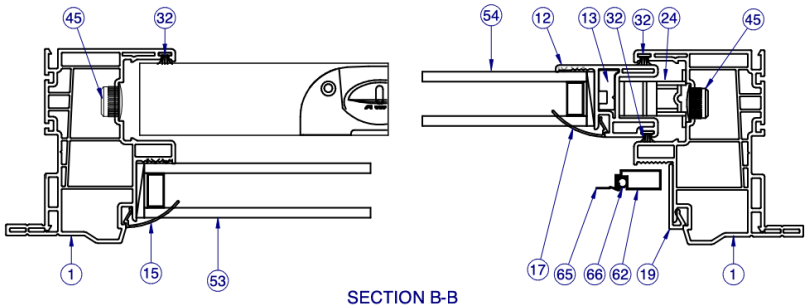

SECTION B-B

NOTE: LEFT SIDE SHOWS FIXED SECTION VIEW,
RIGHT SIDE SHOWS SASH SECTION VIEW.

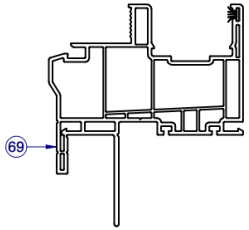

SECTION C-C
ALTERNATE FIN FRAME

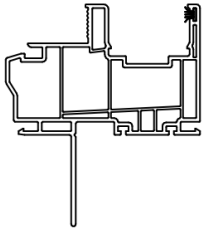

SECTION C-C
ALTERNATE FIN ONLY FRAME

NOTE: ITEMS NOT SHOWN FOR CLARITY:
20, 23, 25-26, 31, 36, 37, 44, 51-52, 55-56, 64, 67-68

Pella Corporation
102 Main Street
Pella, IA 50219
www.pella.com

510 PVC SINGLE HUNG NON-IMPACT

PROPRIETARY AND CONFIDENTIAL
THE INFORMATION CONTAINED IN THIS DRAWING IS THE SOLE PROPERTY OF CUSTOM WINDOW SYSTEMS, INC. ANY REPRODUCTION IN PART OR AS A WHOLE WITHOUT THE WRITTEN PERMISSION OF CUSTOM WINDOW SYSTEMS, INC IS PROHIBITED.

FLORIDA APPROVAL NO.:
33447

9/26/2023

LUCAS A. TURNER, P.E.
FL PE # 58201
Turner Engineering &
Consulting, Inc.
2428 Old Natchez Trc Trl
Camden, TN 38320
PH. 941-380-1574

SHEET DESCRIPTION:
SECTION VIEWS

DRAWN BY:	DATE:
MCS	9/19/2023
DWG #: PEL-154	REV.: B
SCALE: 1:2	SHEET 3 OF 6

PARTS LIST			
ITEM	PART #	DESCRIPTION	MATERIAL
1	H-6222	Main Frame, SH, w/Flg., PVC	Vinyl
5	H-2121	Meet. Rail, Fxd.	Alum
8	H-6224	Sash Meet. Rail, PVC	Vinyl
9	H-2124	Reinf. Sash Meet. Rail	Alum
10	H-6223	Sash Bottom Rail, PVC	Vinyl
12	H-6225	Sash Side/Top/Bot. Rail	Vinyl
13	S-2129	Reinf. S.B.R./S.S.R	Alum
14	S-6237	Glz. Bd., 7/8",Fxd.	Vinyl
18	S-6226	Scrn. Adapt., w/Nib, PVC, Horiz.	Vinyl
19	S-6227	Scrn. Adapt., PVC, Vert.	Vinyl
20	S-5087	SASH STOP, PVC	Vinyl
24		Sash Balance	
25	P-4056	Sash Cam, PVC	Plastic
26	P-3295	Take Out Clip	SS
27	P-3783	Lock, Impact, PVC	
28	P-4069	Keeper, Impact, PVC	Zamac
30	P-4479	Weep Cover w/ Flap	Plastic
32	P-3305	Wstp., .270 x .187 High Density	
37	P-4638	#8 x 2-1/2 PH Mod. Truss Type A, Tek 2	Steel
38	P-3541	#8 x 1/2 Quadrex PH TEK	Steel
39	P-4051W	#8 x 1.250 Ph FH TEK, Wht.	Steel
40	P-3539	#8 x 3/4 PH PN, TEK, Wht	Steel
44	P-3342	Seam Sealer, SM-5504	
45	P-5588	Cap Plug, 1/2" Hole	Nylon
46		Sikaflex 552 or Purfect Glaze "H"	
48	P-5612	Setting Block, .12 x 1 x 2	Rubber
53		Glass, Fixed (See Sheet 3)	
54		Glass, Sash (See Sheet 3)	
55		Spacer (see sheet 3)	
56		Spacer (see sheet 3)	
62	P-3218	Screen Frame	Alum
64	P-4754	SCREEN CORNER KEY	Plastic
65	P-4770	30" BetterVue Insect Screen CHARCOAL	Fiberglass
66	P-5576	Screen Spline, .125" Black PE	Vinyl
68	P-3195	Screen Spring, SS	SS
69	H-6231	Main Fr., SH, w/Fin., PVC	Vinyl
71	S-6228	Fixed Rail Cover	Vinyl

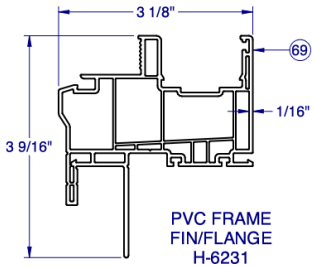

PVC FRAME FIN/FLANGE H-6231

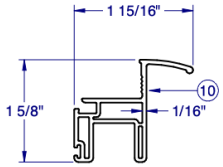

PVC SASH PULL RAIL/STILE H-6223

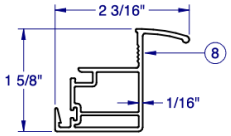

PVC SASH MTG RAIL H-6224

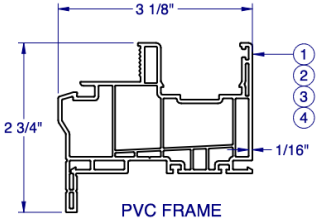

PVC FRAME FLANGE H-6222

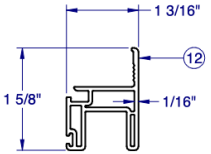

PVC SASH RAIL/STILE H-6225

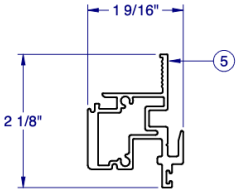

MTG RAIL H-2121

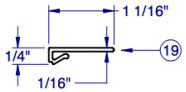

PVC SCREEN SUPPORT S-6227

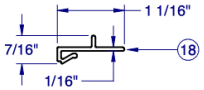

PVC SCREEN CATCH S-6226

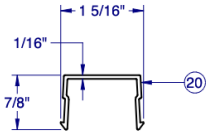

PVC SASH STOP S-6025

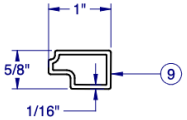

REINF. SASH MTG RAIL H-2124

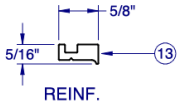

REINF. S-2129

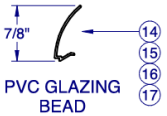

PVC GLAZING BEAD S-6237

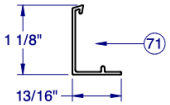

PVC MTG RAIL COVER S-6228

FRAME CORNER CONSTRUCTION

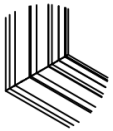
CORNER WELD (ALL SIDES) 1:8

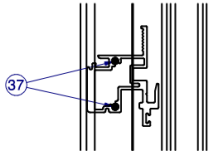

FIXED MEETING RAIL SCREWED TOGETHER WITH OUTERFRAME 1:8

LINE ITEMS NOT USED:
6-7, 11, 21-23, 29, 31, 41-43, 47, 49-50, 57-61

NOTE: ALL EXTRUSIONS ARE ALUMINUM 6063-T6 UNLESS OTHERWISE NOTED.

Pella Corporation
102 Main Street
Pella, IA 50219
www.pella.com

510 PVC SINGLE HUNG NON-IMPACT

PROPRIETARY AND CONFIDENTIAL
THE INFORMATION CONTAINED IN THIS DRAWING IS THE SOLE PROPERTY OF CUSTOM WINDOW SYSTEMS, INC. ANY REPRODUCTION IN PART OR AS A WHOLE WITHOUT THE WRITTEN PERMISSION OF CUSTOM WINDOW SYSTEMS, INC IS PROHIBITED.

FLORIDA APPROVAL NO.:
33447

9/26/2023

LUCAS A. TURNER, P.E.
FL PE # 58201
Turner Engineering & Consulting, Inc.
2428 Old Natchez Trc Trl
Camden, TN 38320
PH. 941-380-1574

SHEET DESCRIPTION:
BOM AND EXTRUSIONS

DRAWN BY:	DATE:
MCS	9/19/2023
DWG #: PEL-154	REV.: B
SCALE: 1:2	SHEET 4 OF 6

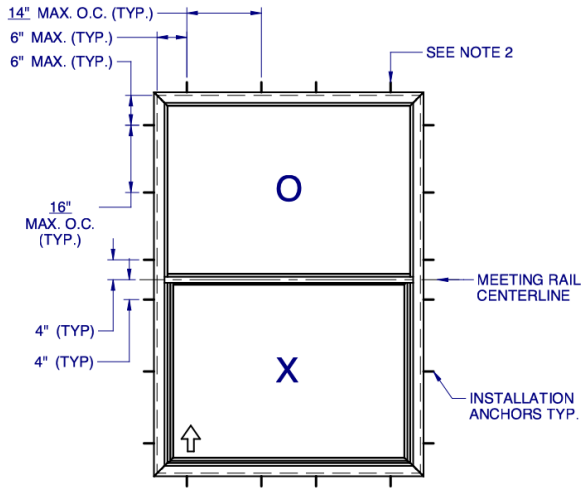

ANCHOR LAYOUT - (FLANGE)

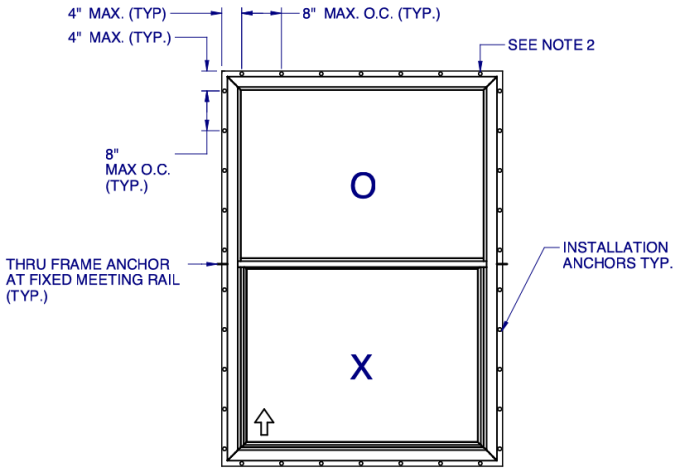

ANCHOR LAYOUT - (FIN)

NOTES:

1. INSTALL ONE ANCHOR AT EACH INSTALLATION LOCATION. SILL ANCHOR SPACING SAME AS HEAD.
2. SHIM AS REQ AT EACH INSTALLATION ANCHOR USING LOAD BEARING SHIMS. MAX. ALLOWABLE SHIM STACK TO BE 1/4". USE SHIMS WHERE SPACE GREATER THAN 1/16" IS PRESENT. LOAD BEARING SHIMS SHALL BE CONSTRUCTED OF HIGH DENSITY PLASTIC OR BETTER. WOOD SHIMS ARE NOT ALLOWED.
3. ANCHOR TYPE, SIZE, SPACING AND EMBEDMENT SHALL BE AS SPECIFIED IN THESE DRAWINGS, SEE TABLE 1, SHEET 6.
4. ALL INSTALLATION ANCHORS MUST BE MADE OF OR PROTECTED WITH A CORROSION RESISTANT MATERIAL OR COATING. DISSIMILAR METALS OR MATERIALS IN CONTACT WITH PRESSURE TREATED WOOD MUST BE PROTECTED TO PREVENT REACTION.
5. INSTALLATION ANCHORS SHALL BE IN ACCORDANCE WITH ANCHOR MANUFACTURER'S INSTALLATION INSTRUCTIONS, AND ANCHORS SHALL NOT BE USED IN SUBSTRATES WITH STRENGTHS LESS THAN THE MINIMUM SPECIFIED IN TABLE 1, SHEET 6.
6. ANCHOR EMBEDMENT TO SUBSTRATE SHALL BE BEYOND WALL DRESSING OR STUCCO. FOR CONCRETE/CMU OPENINGS, EMBEDMENT SHALL BE BEYOND WOOD BUCKS, IF USED, INTO SUBSTRATE - 1X BUCKS ARE OPTIONAL.
7. A MINIMUM CENTER-TO-CENTER SPACING SHALL BE MAINTAINED BETWEEN ALL FASTENERS: 3" FOR MASONRY, 1" FOR WOOD AND METAL.
8. WOOD OR MASONRY OPENINGS, BUCKS AND BUCK FASTENERS SHALL BE PROPERLY DESIGNED BY THE ARCHITECT OR ENGINEER OF RECORD AND INSTALLED TO TRANSFER WIND LOADS TO THE STRUCTURE. SUBSTRATES SHALL MEET THE MINIMUM STRENGTH REQUIREMENTS AS SHOWN IN TABLE1, SHEET 6. CONCRETE AND MASONRY SUBSTRATES MAY NOT BE CRACKED.
9. SEALING AND FLASHING STRATEGIES FOR OVERALL WATER RESISTANCE OF INSTALLATION SHALL BE DONE BY OTHERS FOLLOWING THE CURRENT VERSION OF THE REFERENCE DOCUMENTS: FMA/AAMA 100(FIN WINDOWS), FMA/AAMA 200(FLANGE WINDOWS), FMA/WDMA 250(BOX WINDOWS), FMA/AAMA/WDMA 300(EXTERIOR DOORS)

Pella Corporation
102 Main Street
Pella, IA 50219
www.pella.com

510 PVC SINGLE HUNG NON-IMPACT

PROPRIETARY AND CONFIDENTIAL
THE INFORMATION CONTAINED IN THIS DRAWING IS THE SOLE PROPERTY OF CUSTOM WINDOW SYSTEMS, INC. ANY REPRODUCTION IN PART OR AS A WHOLE WITHOUT THE WRITTEN PERMISSION OF CUSTOM WINDOW SYSTEMS, INC IS PROHIBITED.

FLORIDA APPROVAL NO.:
33447

9/26/2023

LUCAS A. TURNER, P.E.
FL PE # 58201
Turner Engineering & Consulting, Inc.
2428 Old Natchez Trc Trl
Camden, TN 38320
PH. 941-380-1574

SHEET DESCRIPTION:
ANCHOR SCHEDULE AND NOTES

DRAWN BY:	DATE:
MCS	9/19/2023
DWG #: PEL-154	REV.: B
SCALE: 1:25	SHEET 5 OF 6

TYPICAL HEAD ANCHORAGE

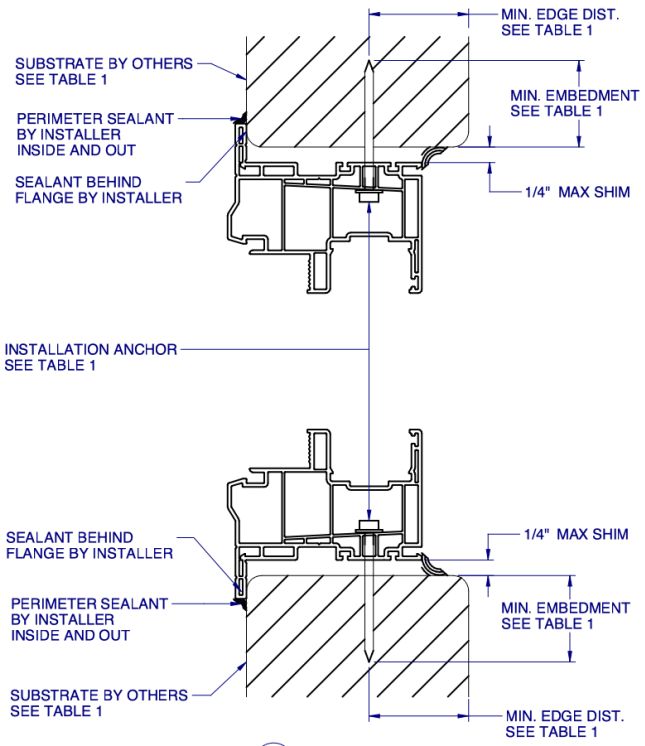

A / 6 VERTICAL SECTION
TYPICAL SILL ANCHORAGE

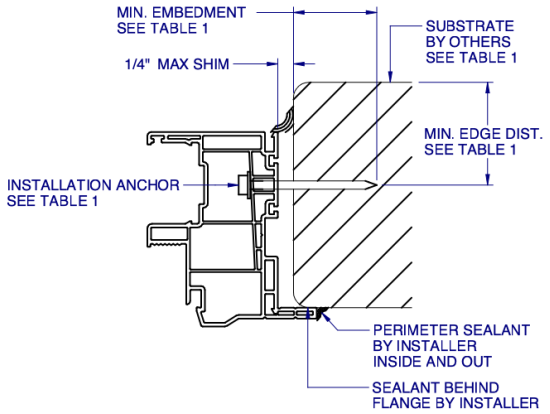

B / 6 HORIZONTAL SECTION
TYPICAL JAMB ANCHORAGE

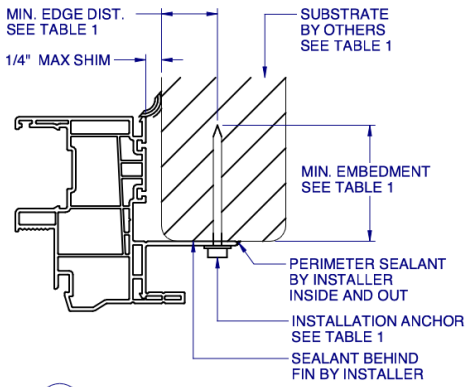

C / 6 HORIZONTAL SECTION
TYPICAL FIN ANCHORAGE
HEAD AND SILL SIMILAR FOR FIN INSTALLATION

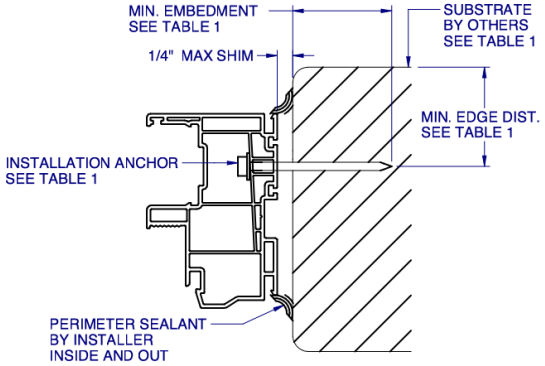

D / 6 HORIZONTAL SECTION
BOX FRAME INSTALLATION
SIMILAR FOR SILL AND JAMBS FOR BOX INSTALLATION

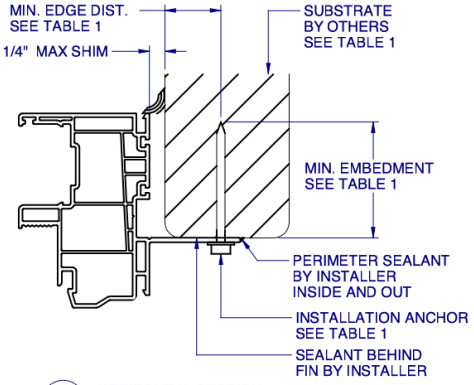

E / 6 HORIZONTAL SECTION
TYPICAL FIN ANCHORAGE
HEAD AND SILL SIMILAR FOR FIN INSTALLATION

TABLE 1: APPROVED INSTALLATION FASTENERS

FRAME TYPE	SUBSTRATE TYPE	ANCHOR TYPE	MIN. EMBEDMENT	MIN. EDGE DIST.
FLANGE	CONCRETE (2.0 KSI MIN.)	3/16" ITW TAPCON	1"	1-1/8"
FLANGE	HOLLOW OR GROUT-FILLED CMU (117 PCF MIN.)	3/16" ITW TAPCON	1"	2"
FLANGE	CONCRETE (3.05 KSI MIN.)	3/16" DEWALT ULTRACON+	1-3/4"	1"
FLANGE	HOLLOW OR GROUT-FILLED CMU (ASTM C-90)	3/16" DEWALT ULTRACON+	1-1/4"	2-1/2"
FLANGE	2X MIN. SOUTHERN PINE (G=0.55)	3/16" ITW TAPCON OR DEWALT ULTRACON+	1-3/8"	7/8"
FLANGE	2X MIN. SOUTHERN PINE (G=0.55)	#10 WOOD SCREW	1-3/8"	7/8"
FLANGE	16 GAUGE (0.060") MIN. STEEL STUD (33 KSI YIELD MIN)	#10-16 HILTI KWIK-FLEX OR ITW TEKS SELF-DRILLING SCREW	FULL THREAD THRU 0.060"	7/16"
FLANGE	1/8" ALUM. (6063-T5 MIN.) OR 1/8" STEEL (33 KSI MIN.)	#10 GRADE 5 SELF-TAPPING / DRILLING SCREW	FULL THREAD THRU 0.125"	7/16"
FIN	2X MIN. SOUTHERN PINE (G=0.55)	#10 WOOD SCREW	1-1/2"	1/2"

FLANGE REMOVAL NOTE: PARTIALLY OR FULLY REMOVING THE FLANGE, UP TO AND INCLUDING A BOX-FRAME APPLICATION IS ACCEPTABLE PROVIDED:

- MIN. 1/4" FILLET OF CONSTRUCTION-GRADE ADHESIVE CAULK IS APPLIED INSIDE AND OUT, FULL PERIMETER, BY INSTALLER.
- PRODUCT ANCHORAGE IS IN ACCORDANCE WITH REQUIREMENTS AS SHOWN FOR FLANGE WINDOWS.

Pella Corporation
102 Main Street
Pella, IA 50219
www.pella.com

510 PVC SINGLE HUNG NON-IMPACT

PROPRIETARY AND CONFIDENTIAL
THE INFORMATION CONTAINED IN THIS DRAWING IS THE SOLE PROPERTY OF CUSTOM WINDOW SYSTEMS, INC. ANY REPRODUCTION IN PART OR AS A WHOLE WITHOUT THE WRITTEN PERMISSION OF CUSTOM WINDOW SYSTEMS, INC IS PROHIBITED.

FLORIDA APPROVAL NO.:
33447

LUCAS A. TURNER
LICENSE
No. 58201
STATE OF FLORIDA
PROFESSIONAL ENGINEER

9/26/2023

LUCAS A. TURNER, P.E.
FL PE # 58201
Turner Engineering & Consulting, Inc.
2428 Old Natchez Trc Trl
Camden, TN 38320
PH. 941-380-1574

SHEET DESCRIPTION:
INSTALLATION DETAILS

DRAWN BY:	DATE:
MCS	9/19/2023
DWG #: PEL-154	REV.: B
SCALE: 1:2	SHEET 6 OF 6

FL #	FL33453-R1
Application Type	Revision
Code Version	2023
Application Status	Approved
Comments	
Archived	☐
Product Manufacturer	Pella Corporation
Address/Phone/Email	102 Main St. Pella, IA 50219 (641) 621-6096 pellaproductapproval@pella.com
Authorized Signature	Mary Rukashaza-Mukome certifications@cws.cc
Technical Representative	Mary Rukashaza-Mukome
Address/Phone/Email	102 Main Street Pella, IA 50219 (641) 621-3317 rukashazamc@pella.com
Quality Assurance Representative	Dave Criscuolo
Address/Phone/Email	1900 SW 44th Avenue Ocala, FL 34474 (647) 651-0199 dcriscuolo@cws.cc
Category	Windows
Subcategory	Fixed
Compliance Method	Evaluation Report from a Florida Registered Architect or a Licensed Florida Professional Engineer ☐ Evaluation Report - Hardcopy Received
Florida Engineer or Architect Name who developed the Evaluation Report	Lucas. A Turner
Florida License	PE-58201
Quality Assurance Entity	Keystone Certifications, Inc.
Quality Assurance Contract Expiration Date	07/15/2030
Validated By	Steven M. Urich, PE ☑ Validation Checklist - Hardcopy Received
Certificate of Independence	FL33453_R1_COI_EvalReportPEL339A.pdf

Referenced Standard and Year (of Standard)

Standard	Year
AAMA/WDMA/CSA/101/I.S.2/A440	2017
PA TAS 202	1994

Equivalence of Product Standards
Certified By

Sections from the Code

Product Approval Method	Method 1 Option D
Date Submitted	08/18/2023
Date Validated	08/20/2023
Date Pending FBC Approval	08/23/2023
Date Approved	10/18/2023

Summary of Products

FL #	Model, Number or Name	Description
33453.1	FX-515	FX-515 Vinyl Fin/Flange Picture Window, Non-Impact
Limits of Use **Approved for use in HVHZ:** No **Approved for use outside HVHZ:** Yes **Impact Resistant:** No **Design Pressure:** N/A **Other:** See Installation Detail for sizes and DPs. Glass complies with ASTM E1300		**Installation Instructions** FL33453_R1_II_PEL-234A.pdf Verified By: Lucas A. Turner 58201 Created by Independent Third Party: Yes **Evaluation Reports** FL33453_R1_AE_EvalReportPEL234A.pdf Created by Independent Third Party: Yes
33453.2	FX-515	FX-515 Vinyl Fin/Flange Picture Window, Non-Impact
Limits of Use **Approved for use in HVHZ:** Yes **Approved for use outside HVHZ:** Yes **Impact Resistant:** No **Design Pressure:** N/A **Other:** See Installation Detail for sizes and DPs. Glass complies with ASTM E1300		**Installation Instructions** FL33453_R1_II_PEL-506A.pdf Verified By: Lucas A. Turner 58201 Created by Independent Third Party: Yes **Evaluation Reports** FL33453_R1_AE_EvalReportPEL506A.pdf Created by Independent Third Party: Yes
33453.3	FX-515	FX-515 Vinyl Fixed Window, Continuous Head & Sill, Non-Impact
Limits of Use **Approved for use in HVHZ:** No **Approved for use outside HVHZ:** Yes **Impact Resistant:** No **Design Pressure:** N/A **Other:** See Installation Detail for sizes and DPs. Glass complies with ASTM E1300		**Installation Instructions** FL33453_R1_II_PEL-511A.pdf Verified By: Lucas A. Turner 58201 Created by Independent Third Party: Yes **Evaluation Reports** FL33453_R1_AE_EvalReportPEL511A.pdf Created by Independent Third Party: Yes
33453.4	FX-530	FX-530 Vinyl Fin/Flange Picture Window, Non-Impact
Limits of Use **Approved for use in HVHZ:** Yes **Approved for use outside HVHZ:** Yes **Impact Resistant:** No **Design Pressure:** N/A **Other:** See Installation Detail for sizes and DPs. Glass complies with ASTM E1300		**Installation Instructions** FL33453_R1_II_PEL-507A.pdf Verified By: Lucas A. Turner 58201 Created by Independent Third Party: Yes **Evaluation Reports** FL33453_R1_AE_EvalReportPEL507A.pdf Created by Independent Third Party: Yes
33453.5	FX-530	FX-530 Vinyl Fin/Flange Picture Window, Non-Impact
Limits of Use **Approved for use in HVHZ:** No **Approved for use outside HVHZ:** Yes **Impact Resistant:** No **Design Pressure:** N/A **Other:** See Installation Detail for sizes and DPs. Glass complies with ASTM E1300		**Installation Instructions** FL33453_R1_II_PEL-339A.pdf Verified By: Lucas A. Turner 58201 Created by Independent Third Party: Yes **Evaluation Reports** FL33453_R1_AE_EvalReportPEL339A.pdf Created by Independent Third Party: Yes

Back Next

PICTURE WINDOW - NON-IMPACT

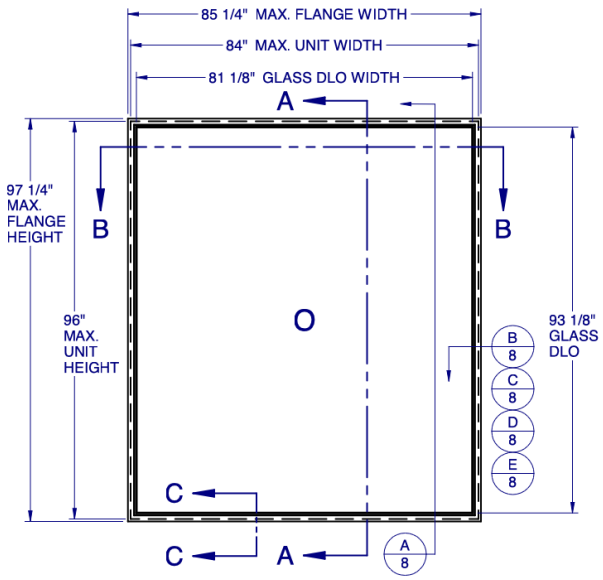

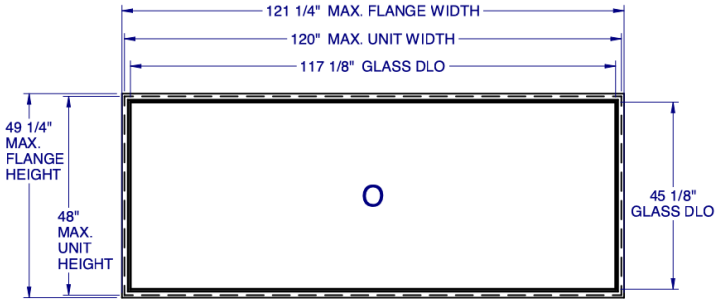

GENERAL NOTES:

1. THE PRODUCT SHOWN HEREIN IS DESIGNED AND MANUFACTURED TO COMPLY WITH THE FLORIDA BUILDING CODE (FBC), CURRENT EDITION.
2. GLAZING OPTIONS: (SEE SHEET 3)
3. CONFIGURATIONS: "O". ARCHITECTURAL SHAPES INCLUDE, BUT ARE NOT LIMITED TO, THOSE SHOWN ON SHEET 2.
4. DESIGN PRESSURE RATING (SEE SHEET 4):
   -NEGATIVE DESIGN LOADS BASED ON, TESTED PRESSURE AND GLASS TABLES ASTM E-1300-04e01/09.
   -POSITIVE DESIGN LOADS BASED ON, TESTED PRESSURE, WATER INFILTRATION TEST PRESSURE AND GLASS TABLES ASTM E-1300-04e01/09.
5. ANCHORAGE: THE 33 1/3% STRESS INCREASE HAS NOT BEEN USED IN THE DESIGN OF THIS PRODUCT. SEE SHEET 8 FOR ANCHOR DETAILS. WINDLOAD DURATION FACTOR Cd=1.6 WAS USED FOR WOOD ANCHOR CALCULATIONS.
6. NOT APPROVED FOR IMPACT RESISTANCE. IMPACT PROTECTIVE SYSTEM IS REQUIRED IN WIND BORNE DEBRIS REGION.
7. ALL FRAMES FULLY WELDED.
8. SERIES / MODEL DESIGNATION PW-8300.
9. THE DESIGNATION X AND O STAND FOR THE FOLLOWING:
   O = FIXED SASH
10. SECTION CALLOUTS APPLY TO ALL ELEVATIONS IN A SIMILAR LOCATION.
11. PICTURE WINDOWS CAN BE INSTALLED IN ANY ORIENTATION

Lucas Turner
2023.08.16
15:11:59
-05'00'

TABLE OF CONTENTS

GENERAL NOTES & ELEVATIONS.....1
ARCHITECTURAL SHAPES.....2
GLAZING DETAILS.....3
COMPARATIVE ANALYSIS.....4
SECTION VIEWS.....5
BOM & EXTRUSIONS.....6
ANCHOR SCHEDULE & NOTES.....7
INSTALLATION DETAILS.....8

MAX. UNIT SIZE	DESIGN PRESSURE RATING	IMPACT RATING
84" x 96"	SEE COMPARATIVE ANALYSIS CHART, SHEET 4	NONE
120" x 48"		NONE

Pella Corporation
102 Main Street
Pella, IA 50219
www.pella.com

530 PVC FIXED WINDOW NON-IMPACT

PROPRIETARY AND CONFIDENTIAL
THE INFORMATION CONTAINED IN THIS DRAWING IS THE SOLE PROPERTY OF CUSTOM WINDOW SYSTEMS, INC. ANY REPRODUCTION IN PART OR AS A WHOLE WITHOUT THE WRITTEN PERMISSION OF CUSTOM WINDOW SYSTEMS, INC IS PROHIBITED.

FLORIDA APPROVAL NO.:
33453

LUCAS A. TURNER
LICENSE
No. 58201
STATE OF FLORIDA
PROFESSIONAL ENGINEER

8/15/2023

LUCAS A. TURNER, P.E.
FL PE # 58201
Turner Engineering & Consulting, Inc.
2428 Old Natchez Trc Trl
Camden, TN 38320
PH. 941-380-1574

SHEET DESCRIPTION:
GENERAL NOTES AND ELEVATIONS

DRAWN BY:	DATE:
MCS	8/9/2023
DWG #: PEL-339	REV.: A
SCALE: 1:30	SHEET 1 OF 8

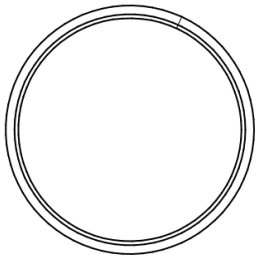

FULL CIRCLE

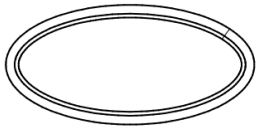

FULL ELLIPSE (OVAL)

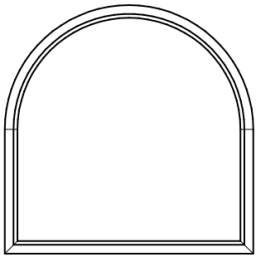

TOMBSTONE

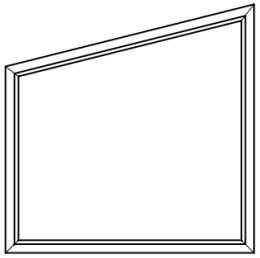

TRAPEZOID

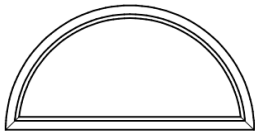

1/2 CIRCLE

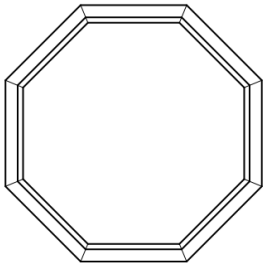

OCTAGON

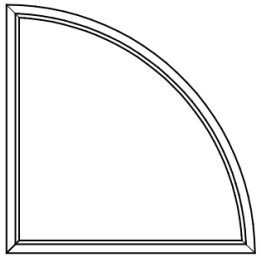

1/4 CIRCLE

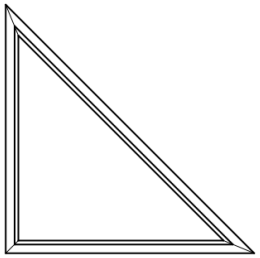

TRIANGLE

NOTES:

1. SEE SHEET 7 FOR DETAILED ANCHOR INSTALLATION REQUIREMENTS.
2. THRU FRAME - MASONRY, WOOD OR METAL OPENING.
   THRU FIN - WOOD OPENING.
3. OVERALL SIZE MUST NOT EXCEED THE MAX. WIDTH AND HEIGHT OF RECTANGULAR WINDOWS ON SHEET 1.
4. ANCHOR SPACING FOR ARCHITECTUAL FLANGE AND FIN WINDOWS MUST FOLLOW THE LAYOUT SHOWN ON SHEET 7, WITH ANCHOR SPACING MEASURED ALONG THE LENGTH OF THE PRODUCT.

Pella Corporation
102 Main Street
Pella, IA 50219
www.pella.com

530 PVC FIXED WINDOW NON-IMPACT

PROPRIETARY AND CONFIDENTIAL
THE INFORMATION CONTAINED IN THIS DRAWING IS THE SOLE PROPERTY OF CUSTOM WINDOW SYSTEMS, INC. ANY REPRODUCTION IN PART OR AS A WHOLE WITHOUT THE WRITTEN PERMISSION OF CUSTOM WINDOW SYSTEMS, INC IS PROHIBITED.

FLORIDA APPROVAL NO.:
33453

LUCAS A. TURNER
LICENSE
No. 58201
STATE OF FLORIDA
PROFESSIONAL ENGINEER

8/15/2023

LUCAS A. TURNER, P.E.
FL PE # 58201
Turner Engineering & Consulting, Inc.
2428 Old Natchez Trc Trl
Camden, TN 38320
PH. 941-380-1574

SHEET DESCRIPTION:
ARCHITECTURAL SHAPES

DRAWN BY:	DATE:
MCS	8/9/2023
DWG #: PEL-339	REV.: A
SCALE: 1:20	SHEET 2 OF 8

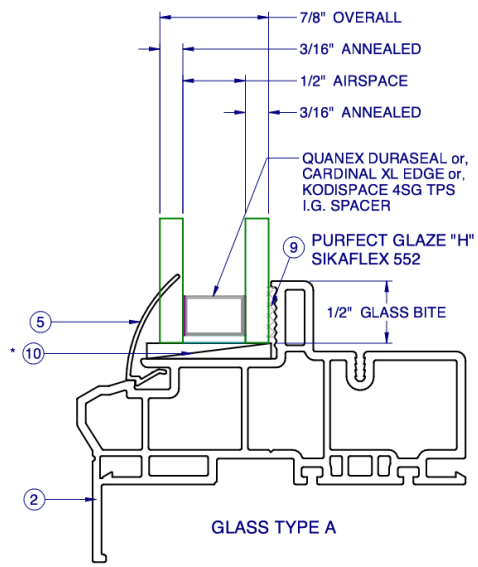

GLASS TYPE A

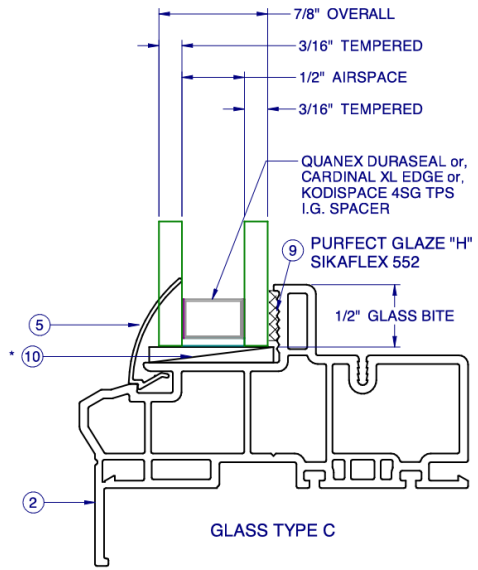

GLASS TYPE C

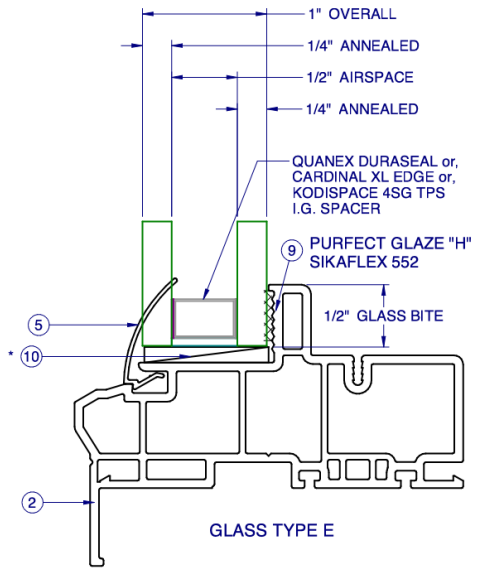

GLASS TYPE E

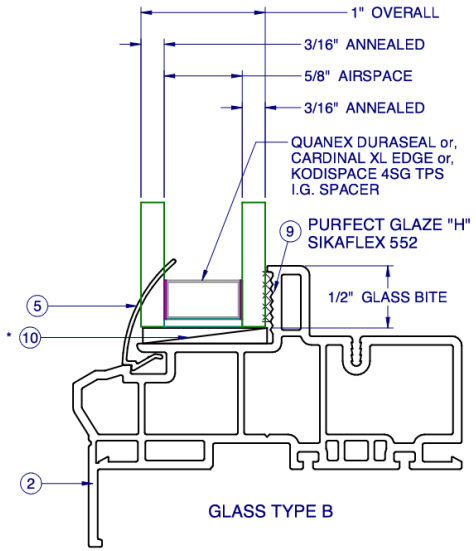

GLASS TYPE B

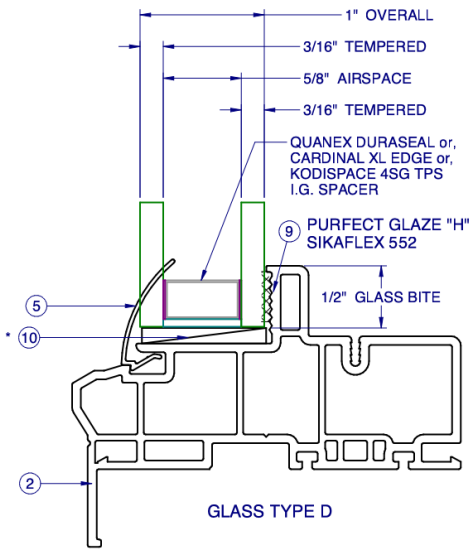

GLASS TYPE D

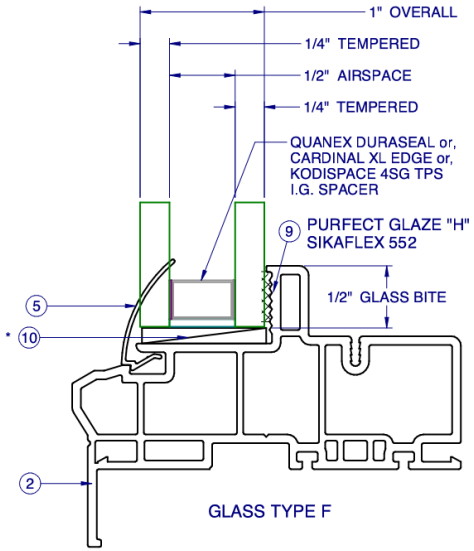

GLASS TYPE F

Pella Corporation
102 Main Street
Pella, IA 50219
www.pella.com

530 PVC FIXED WINDOW NON-IMPACT

PROPRIETARY AND CONFIDENTIAL
THE INFORMATION CONTAINED IN THIS DRAWING IS THE SOLE PROPERTY OF CUSTOM WINDOW SYSTEMS, INC. ANY REPRODUCTION IN PART OR AS A WHOLE WITHOUT THE WRITTEN PERMISSION OF CUSTOM WINDOW SYSTEMS, INC IS PROHIBITED.

FLORIDA APPROVAL NO.:
33453

LUCAS A. TURNER
LICENSE
No. 58201
STATE OF FLORIDA
PROFESSIONAL ENGINEER

8/15/2023

LUCAS A. TURNER, P.E.
FL PE # 58201
Turner Engineering & Consulting, Inc.
2428 Old Natchez Trc Trl
Camden, TN 38320
PH. 941-380-1574

SHEET DESCRIPTION:
GLAZING DETAILS

DRAWN BY:	DATE:
MCS	8/9/2023
DWG #: PEL-339	REV.: A
SCALE: 1:1	SHEET 3 OF 8

"O" CONFIG. DESIGN PRESSURES, PSF (POSITIVE AND NEGATIVE PRESSURES ARE EQUAL)

WINDOW SHORT DIMENSION, UNIT SIZE (IN.)	GLASS TYPE	WINDOW LONG DIMENSION, UNIT SIZE (IN.) 30	36	42	48	54	60	66	72	78	84	90	96	102	108	114	120
30	A,B	60.0	60.0	60.0	60.0	60.0	60.0	60.0	60.0	60.0	60.0	60.0	60.0	60.0	60.0	59.3	57.8
	E	60.0	60.0	60.0	60.0	60.0	60.0	60.0	60.0	60.0	60.0	60.0	60.0	60.0	60.0	60.0	58.5
	C,D,F	97.5	97.5	97.5	97.5	97.5	97.5	97.5	97.5	97.5	97.5	97.5	97.5	60.0	60.0	60.0	58.5
36	A,B	60.0	60.0	60.0	60.0	60.0	60.0	60.0	60.0	60.0	56.2	52.0	48.4	46.1	44.4	42.8	41.2
	E	60.0	60.0	60.0	60.0	60.0	60.0	60.0	60.0	60.0	60.0	60.0	60.0	60.0	56.9	53.3	50.2
	C,D,F	97.5	97.5	97.5	97.5	97.5	97.5	97.5	97.5	97.5	97.5	97.5	97.5	60.0	56.9	53.3	50.2
42	A,B	60.0	60.0	60.0	60.0	60.0	60.0	60.0	60.0	60.0	55.0	49.8	45.5	41.9			
	E	60.0	60.0	60.0	60.0	60.0	60.0	60.0	60.0	60.0	60.0	60.0	56.4	52.2	50.4	47.2	44.3
	C,D,F	97.5	97.5	97.5	97.5	97.5	97.5	97.5	97.5	97.5	97.5	97.5	93.6	52.2	50.4	47.2	44.3
48	A,B	60.0	60.0	60.0	60.0	60.0	60.0	60.0	60.0	60.0	55.0	50.0	45.8	40.0			
	E	60.0	60.0	60.0	60.0	60.0	60.0	60.0	60.0	60.0	60.0	57.3	52.5	40.0	40.0	40.0	40.0
	C,D,F	97.5	97.5	97.5	97.5	97.5	97.5	97.5	97.5	97.5	97.5	93.1	85.3	40.0	40.0	40.0	40.0
54	A,B	60.0	60.0	60.0	60.0	60.0	60.0	60.0	60.0	57.0	52.9	49.0	45.5				
	E	60.0	60.0	60.0	60.0	60.0	60.0	60.0	60.0	60.0	58.9	53.3	48.7				
	C,D,F	97.5	97.5	97.5	97.5	97.5	97.5	97.5	97.5	97.5	95.8	86.7	79.1				
60	A,B	60.0	60.0	60.0	60.0	60.0	60.0	60.0	56.4	52.8	49.3	46.1	43.5				
	E	60.0	60.0	60.0	60.0	60.0	60.0	60.0	60.0	60.0	56.0	50.4	45.8				
	C,D,F	97.5	97.5	97.5	97.5	97.5	91.6	91.6	91.6	91.6	91.0	81.9	74.5				
66	A,B	60.0	60.0	60.0	60.0	60.0	60.0	55.7	52.2	48.6	45.6	42.8	40.4				
	E	60.0	60.0	60.0	60.0	60.0	60.0	55.7	55.7	55.7	53.9	48.2	43.6				
	C,D,F	97.5	97.5	97.5	97.5	97.5	91.6	83.3	83.3	83.3	83.3	78.4	70.9				
72	A,B	60.0	60.0	60.0	60.0	60.0	56.4	52.2	48.3	45.0	42.3						
	E	60.0	60.0	60.0	60.0	60.0	60.0	55.7	51.1	51.1	51.1	46.7	42.0				
	C,D,F	97.5	97.5	97.5	97.5	97.5	91.6	83.3	76.3	76.3	76.3	75.8	68.3				
78	A,B	60.0	60.0	60.0	60.0	57.0	52.8	48.6	45.0	41.9							
	E	60.0	60.0	60.0	60.0	60.0	60.0	55.7	51.1	46.4	46.4	45.6	40.8				
	C,D,F	97.5	97.5	97.5	97.5	97.5	91.6	83.3	76.3	70.4	70.4	70.4	66.3				
84	A,B	60.0	56.2	55.0	55.0	52.9	49.3	45.6	42.3								
	E	60.0	60.0	60.0	60.0	58.9	56.0	53.9	51.1	46.4	40.0	40.0	40.0				
	C,D,F	97.5	97.5	97.5	97.5	95.8	91.0	83.3	76.3	70.4	65.0	65.0	65.0				

NOTES:
1. IF SIZE INTENDED IS NOT SHOWN, USE NEXT LARGER SIZE.
2. SHADED SIZES ARE NOT ALLOWED FOR THAT GLASS TYPE.

Pella Corporation
102 Main Street
Pella, IA 50219
www.pella.com

530 PVC FIXED WINDOW NON-IMPACT

PROPRIETARY AND CONFIDENTIAL
THE INFORMATION CONTAINED IN THIS DRAWING IS THE SOLE PROPERTY OF CUSTOM WINDOW SYSTEMS, INC. ANY REPRODUCTION IN PART OR AS A WHOLE WITHOUT THE WRITTEN PERMISSION OF CUSTOM WINDOW SYSTEMS, INC IS PROHIBITED.

FLORIDA APPROVAL NO.:
33453

LUCAS A. TURNER
LICENSE
No. 58201
STATE OF FLORIDA
PROFESSIONAL ENGINEER

8/15/2023

LUCAS A. TURNER, P.E.
FL PE # 58201
Turner Engineering & Consulting, Inc.
2428 Old Natchez Trc Trl
Camden, TN 38320
PH. 941-380-1574

SHEET DESCRIPTION:
COMPARATIVE ANALYSIS

DRAWN BY:	DATE:
MCS	8/9/2023
DWG #: PEL-339	REV.: A
SCALE: 1:1	SHEET 4 OF 8

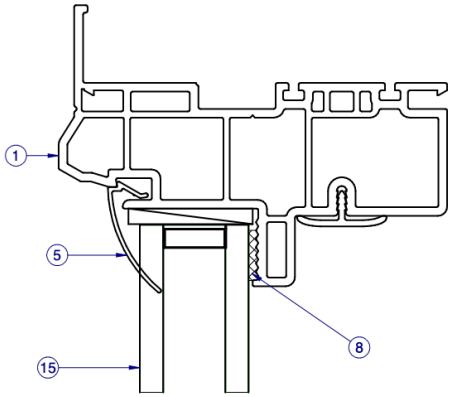

INTERIOR

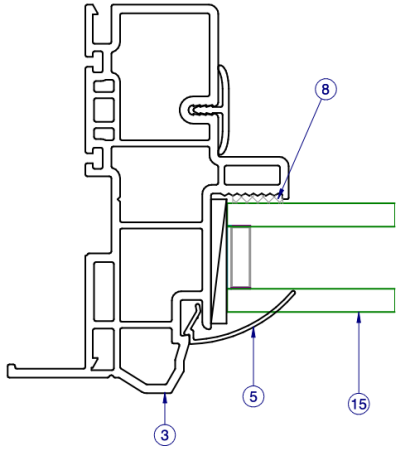

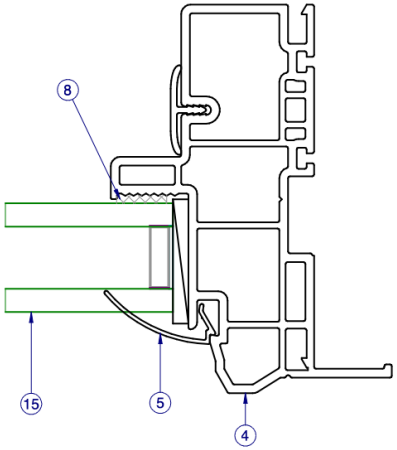

SECTION VIEW B-B

INTERIOR

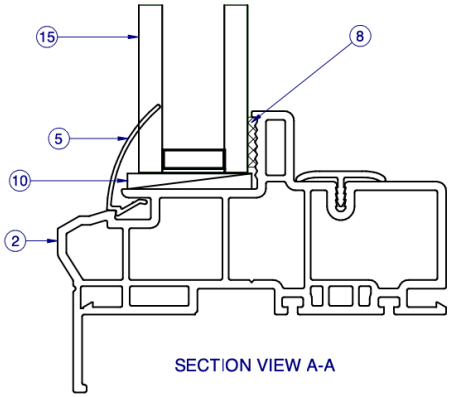

SECTION VIEW A-A

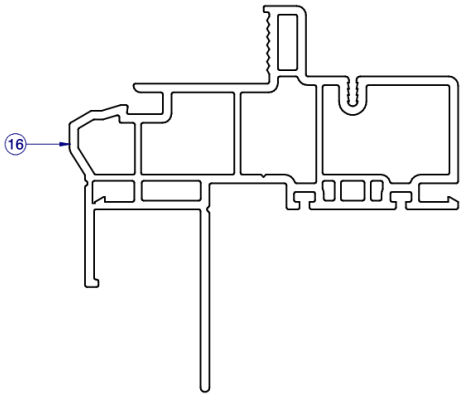

SECTION VIEW C-C
ALTERNATE FIN FRAME

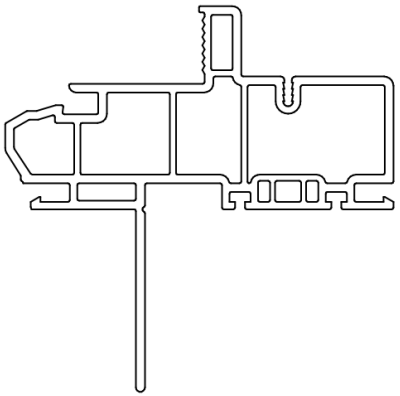

SECTION VIEW C-C
ALTERNATE FIN ONLY FRAME

ITEMS NOT SHOWN FOR CLARITY:
9, 11-14

Pella Corporation
102 Main Street
Pella, IA 50219
www.pella.com

530 PVC FIXED WINDOW NON-IMPACT

PROPRIETARY AND CONFIDENTIAL
THE INFORMATION CONTAINED IN THIS DRAWING IS THE SOLE PROPERTY OF CUSTOM WINDOW SYSTEMS, INC. ANY REPRODUCTION IN PART OR AS A WHOLE WITHOUT THE WRITTEN PERMISSION OF CUSTOM WINDOW SYSTEMS, INC IS PROHIBITED.

FLORIDA APPROVAL NO.:
33453

8/15/2023

LUCAS A. TURNER, P.E.
FL PE # 58201
Turner Engineering & Consulting, Inc.
2428 Old Natchez Trc Trl
Camden, TN 38320
PH. 941-380-1574

SHEET DESCRIPTION:
SECTION VIEWS

DRAWN BY:	DATE:
MCS	8/9/2023
DWG #: PEL-339	REV.: A
SCALE: 1:1	SHEET 5 OF 8

PARTS LIST			
ITEM	PART #	DESCRIPTION	MATERIAL
1	H-6232	FRAME-PVC, FIN/FLANGE	PVC
2	H-6232	FRAME-PVC, FIN/FLANGE	PVC
3	H-6232	FRAME-PVC, FIN/FLANGE	PVC
4	H-6232	FRAME-PVC, FIN/FLANGE	PVC
5	S-6237	GLAZING BEAD, FIXED	PVC
8	S-6233	Trim Cover	PVC
9		SIKAFLEX 552 OR PURFECT GLAZE "H"	
10	P-5531	Set. Blk., 85 Dur., 1/8" x 1" x 2" Lg.	Rubber
11		PW-8300 Gold Cert. Label, NFRC Tab	
13		NFRC LABEL, BLANK 4 X 8 LABEL	
14	P-5304	LABEL, 9X9 CWS Logo Label	
15	GLASS	SEE SHEET 3	
16	H-6232	Fr. Main, PVC, Fin	PVC

LINE ITEMS NOT USED:
6-7, 12

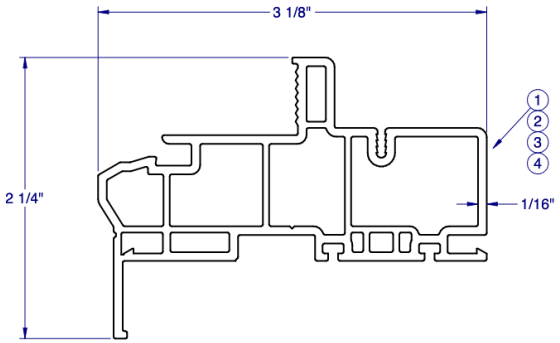

PVC FRAME FLANGE
S-6232

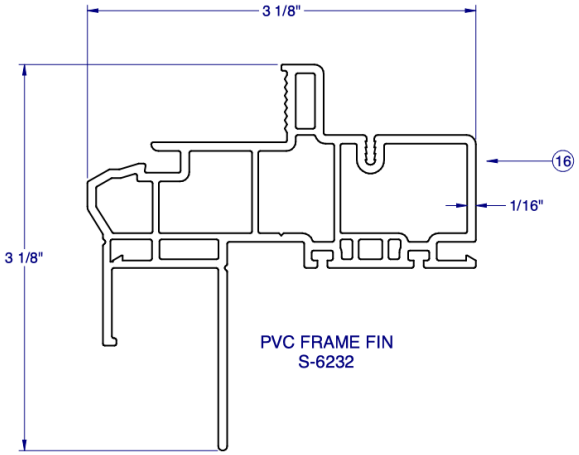

PVC FRAME FIN
S-6232

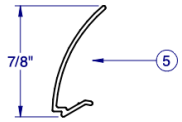

PVC GLAZING BEAD
S-6237

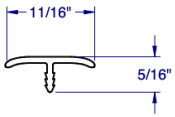

PVC TRIM COVER
S-6233

FRAME CORNER CONSTRUCTION

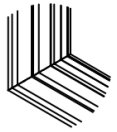

CORNER WELD
(ALL SIDES)
1:8

Pella Corporation
102 Main Street
Pella, IA 50219
www.pella.com

530 PVC FIXED WINDOW NON-IMPACT

PROPRIETARY AND CONFIDENTIAL
THE INFORMATION CONTAINED IN THIS DRAWING IS THE SOLE PROPERTY OF CUSTOM WINDOW SYSTEMS, INC. ANY REPRODUCTION IN PART OR AS A WHOLE WITHOUT THE WRITTEN PERMISSION OF CUSTOM WINDOW SYSTEMS, INC IS PROHIBITED.

FLORIDA APPROVAL NO.:
33453

8/15/2023

LUCAS A. TURNER, P.E.
FL PE # 58201
Turner Engineering & Consulting, Inc.
2428 Old Natchez Trc Trl
Camden, TN 38320
PH. 941-380-1574

SHEET DESCRIPTION:
BOM AND EXTRUSIONS

DRAWN BY:	DATE:
MCS	8/9/2023
DWG #: PEL-339	REV.: A
SCALE: 1:1	SHEET 6 OF 8

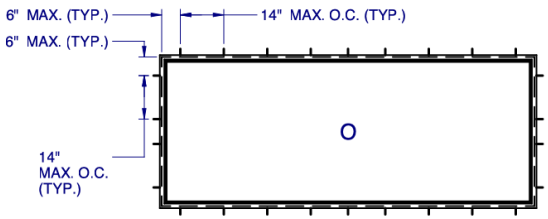

ANCHOR LAYOUT - (FLANGE)
120" x 48"

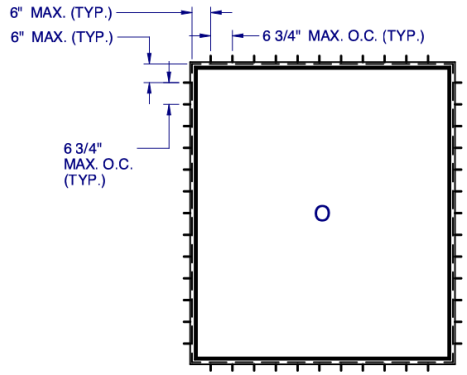

ANCHOR LAYOUT - (FLANGE)
84" x 96" WITH TEMPERED GLASS

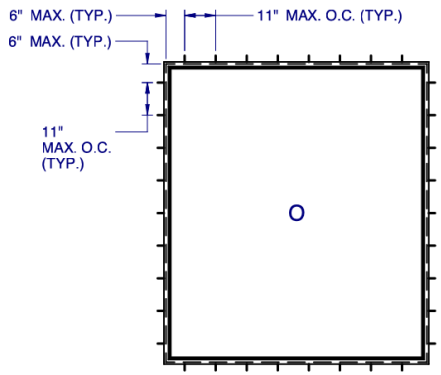

ANCHOR LAYOUT - (FLANGE)
84" x 96" WITH ANNEALED GLASS

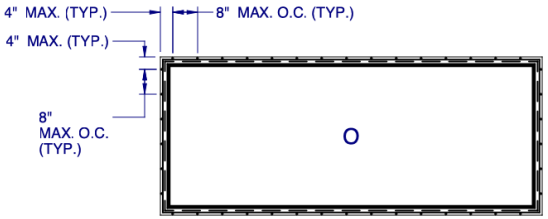

ANCHOR LAYOUT - (FIN)
120" x 48"

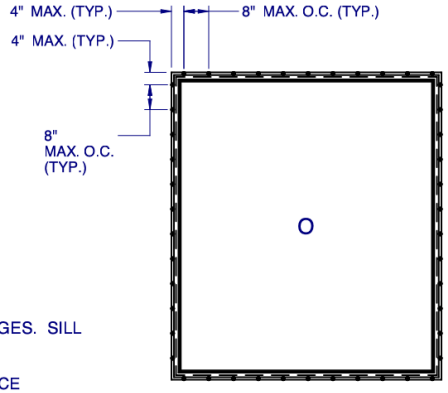

ANCHOR LAYOUT - (FIN)
84" x 96"

NOTES:

1. INSTALL ONE ANCHOR AT EACH INSTALLATION LOCATION. ANCHOR SPACING APPLIES TO ALL SHAPES (SEE SHEET 2) ALONG ALL FRAME EDGES. SILL ANCHOR SPACING SAME AS HEAD.
2. SHIM AS REQ AT EACH INSTALLATION ANCHOR USING LOAD BEARING SHIMS. MAX. ALLOWABLE SHIM STACK TO BE 1/4". USE SHIMS WHERE SPACE GREATER THAN 1/16" IS PRESENT. LOAD BEARING SHIMS SHALL BE CONSTRUCTED OF HIGH DENSITY PLASTIC OR BETTER. WOOD SHIMS ARE NOT ALLOWED.
3. ANCHOR TYPE, SIZE, SPACING AND EMBEDMENT SHALL BE AS SPECIFIED IN THESE DRAWINGS, SEE TABLE 1, SHEET 8.
4. ALL INSTALLATION ANCHORS MUST BE MADE OF OR PROTECTED WITH A CORROSION RESISTANT MATERIAL OR COATING. DISSIMILAR METALS OR MATERIALS IN CONTACT WITH PRESSURE TREATED WOOD MUST BE PROTECTED TO PREVENT REACTION.
5. INSTALLATION ANCHORS SHALL BE IN ACCORDANCE WITH ANCHOR MANUFACTURER'S INSTALLATION INSTRUCTIONS, AND ANCHORS SHALL NOT BE USED IN SUBSTRATES WITH STRENGTHS LESS THAN THE MINIMUM SPECIFIED IN TABLE 1, SHEET 8.
6. ANCHOR EMBEDMENT TO SUBSTRATE SHALL BE BEYOND WALL DRESSING OR STUCCO. FOR CONCRETE/CMU OPENINGS, EMBEDMENT SHALL BE BEYOND WOOD BUCKS, IF USED, INTO SUBSTRATE - 1X BUCKS ARE OPTIONAL.
7. A MINIMUM CENTER-TO-CENTER SPACING SHALL BE MAINTAINED BETWEEN ALL FASTENERS: 3" FOR MASONRY, 1" FOR WOOD AND METAL.
8. WOOD OR MASONRY OPENINGS, BUCKS AND BUCK FASTENERS SHALL BE PROPERLY DESIGNED BY THE ARCHITECT OR ENGINEER OF RECORD AND INSTALLED TO TRANSFER WIND LOADS TO THE STRUCTURE. SUBSTRATES SHALL MEET THE MINIMUM STRENGTH REQUIREMENTS AS SHOWN IN TABLE1, SHEET 8. CONCRETE AND MASONRY SUBSTRATES MAY NOT BE CRACKED.
9. SEALING AND FLASHING STRATEGIES FOR OVERALL WATER RESISTANCE OF INSTALLATION SHALL BE DONE BY OTHERS FOLLOWING THE CURRENT VERSION OF THE REFERENCE DOCUMENTS: FMA/AAMA 100(FIN WINDOWS), FMA/AAMA 200(FLANGE WINDOWS), FMA/WDMA 250(BOX WINDOWS), FMA/AAMA/WDMA 300(EXTERIOR DOORS)

Pella Corporation
102 Main Street
Pella, IA 50219
www.pella.com

530 PVC FIXED WINDOW NON-IMPACT

PROPRIETARY AND CONFIDENTIAL
THE INFORMATION CONTAINED IN THIS DRAWING IS THE SOLE PROPERTY OF CUSTOM WINDOW SYSTEMS, INC. ANY REPRODUCTION IN PART OR AS A WHOLE WITHOUT THE WRITTEN PERMISSION OF CUSTOM WINDOW SYSTEMS, INC IS PROHIBITED.

FLORIDA APPROVAL NO.:
33453

8/15/2023

LUCAS A. TURNER, P.E.
FL PE # 58201
Turner Engineering & Consulting, Inc.
2428 Old Natchez Trc Trl
Camden, TN 38320
PH. 941-380-1574

SHEET DESCRIPTION:
ANCHOR SCHEDULE AND NOTES

DRAWN BY:	DATE:
MCS	8/9/2023
DWG #: PEL-339	REV.: A
SCALE: 1:40	SHEET 7 OF 8

TYPICAL HEAD ANCHORAGE

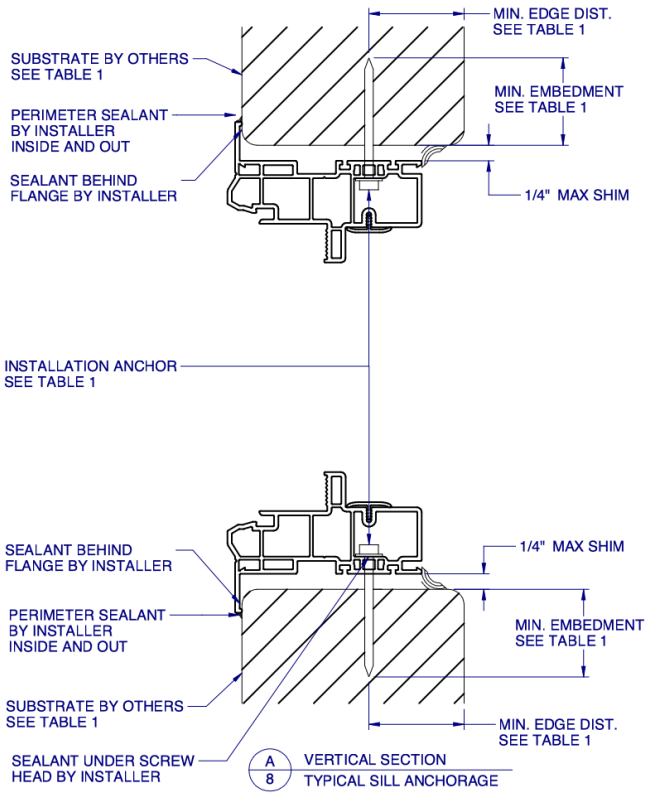

A / 8 VERTICAL SECTION
TYPICAL SILL ANCHORAGE

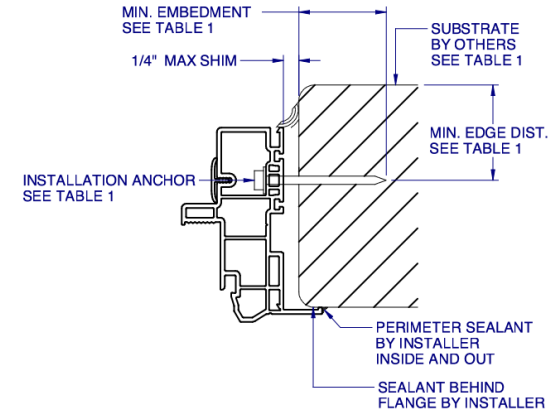

B / 8 HORIZONTAL SECTION
TYPICAL JAMB ANCHORAGE

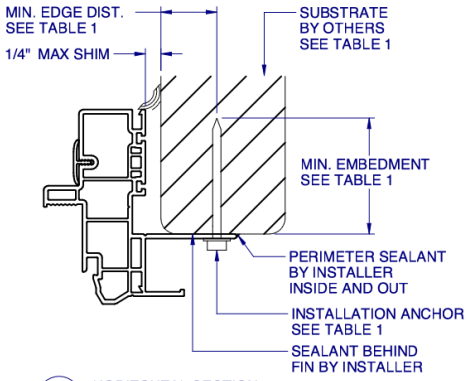

C / 8 HORIZONTAL SECTION
TYPICAL FIN ANCHORAGE
HEAD AND SILL SIMILAR FOR FIN INSTALLATION

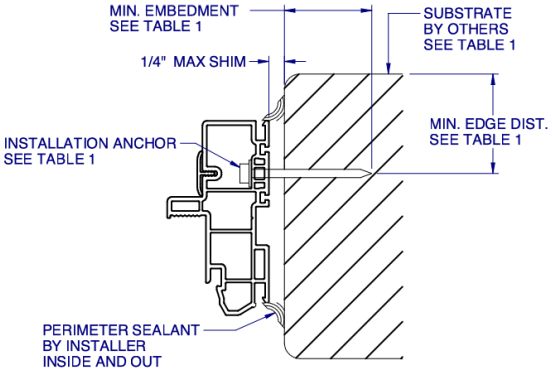

D / 8 HORIZONTAL SECTION
BOX FRAME INSTALLATION
HEAD AND SILL SIMILAR FOR BOX INSTALLATION

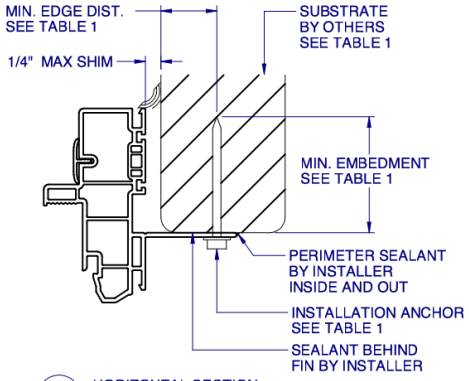

E / 8 HORIZONTAL SECTION
TYPICAL FIN ANCHORAGE
HEAD AND SILL SIMILAR FOR FIN INSTALLATION

TABLE 1: APPROVED INSTALLATION FASTENERS

FRAME TYPE	SUBSTRATE TYPE	ANCHOR TYPE	MIN. EMBEDMENT	MIN. EDGE DIST.
FLANGE	CONCRETE (2.0 KSI MIN.)	3/16" ITW TAPCON	1-1/2"	1-1/8"
FLANGE	HOLLOW OR GROUT-FILLED CMU (117 PCF MIN.)	3/16" ITW TAPCON	1"	2"
FLANGE	CONCRETE (3.05 KSI MIN.)	3/16" DEWALT ULTRACON+	1-3/4"	1"
FLANGE	HOLLOW OR GROUT-FILLED CMU (ASTM C-90)	3/16" DEWALT ULTRACON+	1-1/4"	2-1/2"
FLANGE	2X MIN. SOUTHERN PINE (G=0.55)	3/16" ITW TAPCON OR DEWALT ULTRACON+	1-3/8"	7/8"
FLANGE	2X MIN. SOUTHERN PINE (G=0.55)	#10 WOOD SCREW	1-3/8"	7/8"
FLANGE	16 GAUGE (0.060") MIN. STEEL STUD (33 KSI YIELD MIN)	#10-16 HILTI KWIK-FLEX OR ITW TEKS SELF-DRILLING SCREW	FULL THREAD THRU 0.060"	7/16"
FLANGE	1/8" ALUM. (6063-T5 MIN.) OR 1/8" STEEL (33 KSI MIN.)	#10 GRADE 5 SELF-TAPPING / DRILLING SCREW	FULL THREAD THRU 0.125"	7/16"
FIN	2X MIN. SOUTHERN PINE (G=0.55)	#10 WOOD SCREW	1-1/2"	1/2"

FLANGE REMOVAL NOTE: PARTIALLY OR FULLY REMOVING THE FLANGE, UP TO AND INCLUDING A BOX-FRAME APPLICATION IS ACCEPTABLE PROVIDED:

- MIN. 1/4" FILLET OF CONSTRUCTION-GRADE ADHESIVE CAULK IS APPLIED INSIDE AND OUT, FULL PERIMETER, BY INSTALLER.
- PRODUCT ANCHORAGE IS IN ACCORDANCE WITH REQUIREMENTS AS SHOWN FOR FLANGE WINDOWS.

Pella Corporation
102 Main Street
Pella, IA 50219
www.pella.com

530 PVC FIXED WINDOW NON-IMPACT

PROPRIETARY AND CONFIDENTIAL
THE INFORMATION CONTAINED IN THIS DRAWING IS THE SOLE PROPERTY OF CUSTOM WINDOW SYSTEMS, INC. ANY REPRODUCTION IN PART OR AS A WHOLE WITHOUT THE WRITTEN PERMISSION OF CUSTOM WINDOW SYSTEMS, INC IS PROHIBITED.

FLORIDA APPROVAL NO.:
33453

LUCAS A. TURNER
LICENSE
No. 58201
STATE OF FLORIDA
PROFESSIONAL ENGINEER

8/15/2023

LUCAS A. TURNER, P.E.
FL PE # 58201
Turner Engineering & Consulting, Inc.
2428 Old Natchez Trc Trl
Camden, TN 38320
PH. 941-380-1574

SHEET DESCRIPTION:
INSTALLATION DETAILS

DRAWN BY:	DATE:
MCS	8/9/2023
DWG #: PEL-339	REV.: A
SCALE: 1:2	SHEET 8 OF 8

FL #	FL33622-R1
Application Type	Revision
Code Version	2023
Application Status	Approved
Comments	
Archived	☐
Product Manufacturer	Pella Corporation
Address/Phone/Email	102 Main St. Pella, IA 50219 (641) 621-6096 pellaproductapproval@pella.com
Authorized Signature	Mary Rukashaza-Mukome certifications@cws.cc
Technical Representative	Mary Rukashaza-Mukome
Address/Phone/Email	102 Main Street Pella, IA 50219 (641) 621-3317 rukashazamc@pella.com
Quality Assurance Representative	Dave Criscuolo
Address/Phone/Email	1900 SW 44th Avenue Ocala, FL 34474 (647) 651-0199 dcriscuolo@cws.cc
Category	Windows
Subcategory	Mullions
Compliance Method	Evaluation Report from a Florida Registered Architect or a Licensed Florida Professional Engineer ☐ Evaluation Report - Hardcopy Received
Florida Engineer or Architect Name who developed the Evaluation Report	Lucas A. Turner
Florida License	PE-58201
Quality Assurance Entity	Keystone Certifications, Inc.
Quality Assurance Contract Expiration Date	07/15/2030
Validated By	Steven M. Urich, PE ☑ Validation Checklist - Hardcopy Received
Certificate of Independence	FL33622_R1_COI_EvalReportPEL836A.pdf

Referenced Standard and Year (of Standard)

Standard	Year
AAMA 450	2020
ASTM E 1996	2020
ASTM E1886	2019
TAS 201/202/203	1994

Equivalence of Product Standards
Certified By

Sections from the Code

Product Approval Method	Method 1 Option D
Date Submitted	10/12/2023
Date Validated	10/13/2023
Date Pending FBC Approval	10/21/2023
Date Approved	12/13/2023

Summary of Products

FL #	Model, Number or Name	Description
33622.1	3" Alum. Tube mullion	3" Alum. Tube Mullion, Horizontal & Vertical, Fin & Flange applications, HVHZ Large Missile Impact
Limits of Use **Approved for use in HVHZ:** Yes **Approved for use outside HVHZ:** Yes **Impact Resistant:** Yes **Design Pressure:** N/A **Other:** Large Missile Impact; See Installation Instructions and Evaluation Report for complete list of Limitations and Conditions of Use.		**Installation Instructions** FL33622_R1_II_PEL-836A.pdf Verified By: Lucas A. Turner 58201 Created by Independent Third Party: Yes **Evaluation Reports** FL33622_R1_AE_EvalReportPEL836A.pdf Created by Independent Third Party: Yes
33622.2	3" Alum. Tube mullion	3" Alum. Tube Mullion, Horizontal & Vertical, Fin & Flange applications. (IMPACT-WIND ZONE 3)
Limits of Use **Approved for use in HVHZ:** No **Approved for use outside HVHZ:** Yes **Impact Resistant:** Yes **Design Pressure:** N/A **Other:** Wind Zone 3. Installation Instructions and Evaluation Report for complete list of Limitations and Conditions of Use.		**Installation Instructions** FL33622_R1_II_PEL-1207.pdf Verified By: Luke A. Turner 58201 Created by Independent Third Party: Yes **Evaluation Reports** FL33622_R1_AE_EvalReportPEL1207.pdf Created by Independent Third Party: Yes
33622.3	4" Alum. Tube Mullion	4" Alum. Tube Mullion, Horizontal & Vertical, Fin & Flange applications. (IMPACT-WIND ZONE 3)
Limits of Use **Approved for use in HVHZ:** No **Approved for use outside HVHZ:** Yes **Impact Resistant:** Yes **Design Pressure:** N/A **Other:** See Installation Instructions and Evaluation Report for complete list of Limitations and Conditions of Use. Installation Instructions		**Installation Instructions** FL33622_R1_II_PEL-1208.pdf Verified By: Luke A. Turner 58201 Created by Independent Third Party: Yes **Evaluation Reports** FL33622_R1_AE_EvalReportPEL1208.pdf Created by Independent Third Party: Yes
33622.4	4" Alum. Tube Mullion	4" Alum. Tube Mullion, Horizontal & Vertical, Fin & Flange applications, HVHZ Large Missile Impact
Limits of Use **Approved for use in HVHZ:** Yes **Approved for use outside HVHZ:** Yes **Impact Resistant:** Yes **Design Pressure:** N/A **Other:** Large Missile Impact; See Installation Instructions and Evaluation Report for complete list of Limitations and Conditions of Use.		**Installation Instructions** FL33622_R1_II_PEL-837A.pdf Verified By: Lucas A. Turner 58201 Created by Independent Third Party: Yes **Evaluation Reports** FL33622_R1_AE_EvalReportPEL837A.pdf Created by Independent Third Party: Yes
33622.5	5 1/2" Alum. Tube Mullion	5 1/2" Alum. Tube Mullion, Horizontal & Vertical, Fin & Flange applications, HVHZ Large Missile Impact

3" PVC MULL BAR - LARGE MISSILE IMPACT

SHOWN w/DIFFERENT OPTIONS

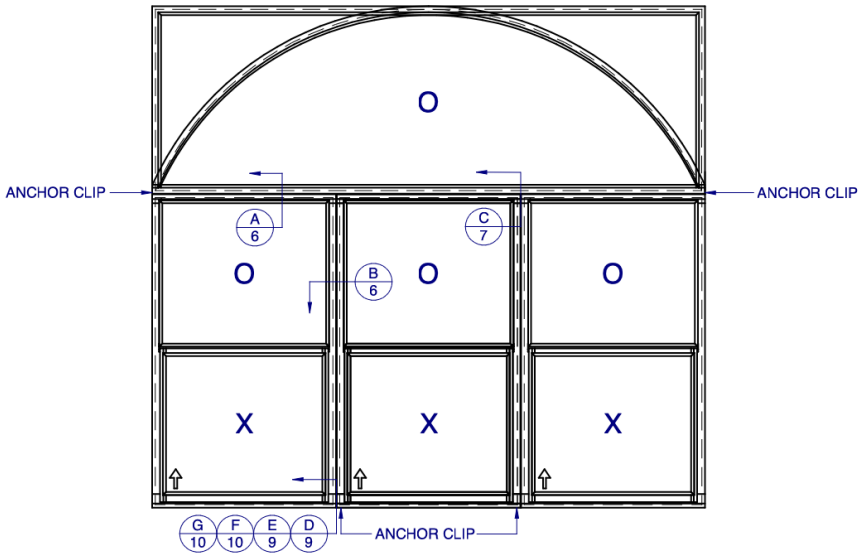

EXAMPLE HORIZ/.VERT. MULLION
FOR SECTION VIEW ONLY

GENERAL NOTES:

1. THE PRODUCT SHOWN HEREIN IS DESIGNED AND MANUFACTURED TO COMPLY WITH THE FLORIDA BUILDING CODE (FBC), CURRENT EDITION INCLUDING THE HIGH VELOCITY HURRICANE ZONE (HVHZ) AND IS RATED FOR WIND ZONE 4 MISSILE LEVEL D IMPACT USE AS DEFINED IN ASTM E 1996 PER THE FBC.
2. CONFIGURATIONS (SEE SHEETS 2-3): VERTICAL OR HORIZONTAL.
3. SEE MULLION CHARTS FOR MAX. DESIGN PRESSURES AND LENGTH. (REFER TO SHEETS 2-3)
4. ANCHORAGE: THE 33 1/3% STRESS INCREASE HAS NOT BEEN USED IN THE DESIGN OF THIS PRODUCT. SEE SHEETS 9-10 FOR ANCHOR DETAILS. WINDLOAD DURATION FACTOR Cd=1.6 WAS USED FOR WOOD ANCHOR CALCULATIONS.
5. PRODUCT APPROVED FOR IMPACT RESISTANCE. SHUTTERS ARE NOT REQUIRED.
6. DESIGN PRESSURE OF MULLED UNITS SHALL BE CONTROLLED BY THE LESSER DESIGN PRESSURE OF THE MULLION OR THE INDIVIDUAL WINDOW UNITS.
7. DESIGN PRESSURES AND INSTALLATION DETAILS SHOWN IN THIS DOCUMENT APPLY ONLY TO THE MULLION. WINDOWS MUST BE APPROVED UNDER SEPARATE APPROVAL.
8. RESPONSIBILITY OF SELECTING FENESTRATION PRODUCTS TO MEET ANY APPLICABLE LOCAL LAWS, BUILDING CODES, ORDINANCES OR OTHER SAFTEY REQUIREMENTS RESTS SOLEY WITH THE ARCHITECT, ENGINEER OF RECORD, BUILDING OWNER OR CONTRACTOR.
9. SINGLE UNITS TO BE MULLED ARE NOT LIMITED TO THOSE SHOWN IN THIS DRAWING. SINGLE UNITS TO BE MULLED TOGETHER MUST BE MANUFACTURED BY CUSTOM WINDOW SYSTEMS, INC. AND MUST BE MADE OUT OF VINYL PVC OR EXTRUDED ALUMINUM.
10. VERTICAL MULLED UNITS MAY BE MULLED INDEFINITELY AS LONG AS THE SINGLE UNIT WIDTH AND HEIGHT ARE NOT EXCEEDED, AND MULLIONS ARE ANCHORED AS SHOWN HERE IN.
11. HORIZONTAL MULLION SHALL EXTEND THE ENTIRE WIDTH OF THE MULLED UNIT. VERTICAL MULLION IS USED TO MULL SIDE BY SIDE UNITS TOGETHER.

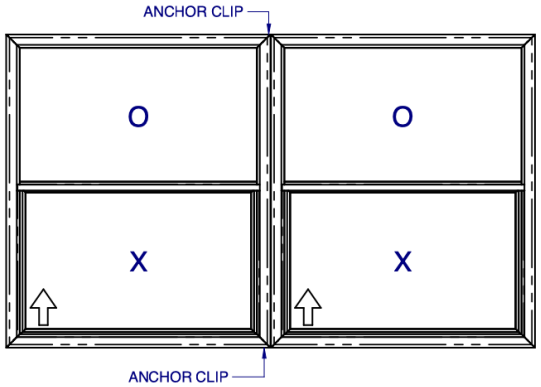

EXAMPLE VERTICAL MULLION FOR
PVC WINDOWS FOR SECTION VIEWS ONLY

Lucas Turner
2023.10.11
18:16:19
-05'00'

TABLE OF CONTENTS

GENERAL NOTES & ELEVATIONS.....1
DP CHARTS.....2-3
BOM & EXTRUSIONS.....4
EXTRUSIONS.....5
SECTION VIEWS.....6-7
CONFIGURATIONS & ANCHOR NOTES.....8
INSTALLATION DETAILS.....9-10

Pella Corporation
102 Main Street
Pella, IA 50219
www.pella.com

3" PVC MULL BAR IMPACT

PROPRIETARY AND CONFIDENTIAL
THE INFORMATION CONTAINED IN THIS DRAWING IS THE SOLE PROPERTY OF CUSTOM WINDOW SYSTEMS, INC. ANY REPRODUCTION IN PART OR AS A WHOLE WITHOUT THE WRITTEN PERMISSION OF CUSTOM WINDOW SYSTEMS, INC IS PROHIBITED.

FLORIDA APPROVAL NO.:
33622

10/11/2023

LUCAS A. TURNER, P.E.
FL PE # 58201
Turner Engineering & Consulting, Inc.
2428 Old Natchez Trc Trl
Camden, TN 38320
PH. 941-380-1574

SHEET DESCRIPTION:
GENERAL NOTES AND ELEVATIONS

DRAWN BY:	DATE:
MCS	10/3/2023
DWG #: PEL-836	REV.: A
SCALE: 1:25	SHEET 1 OF 10

Design Pressure Chart (PSF) for NON-INTERSECTED Impact PVC 3" Mullion H-1758, with 1522 clips using four (4) #10 Screws into WOOD or METAL or 3/16" ITW Tapcons or DEWALT ULTRACON+ into SOLID CONCRETE or WOOD per each end of mullion. HOLLOW or GROUT-FILLED BLOCK require 1/4" DEWALT ULTRACON+.

MULL LENGTH (in.)	OPENING SIZE (in.)																	
	39	45	51	57	63	69	75 3/8	81	87	93	99	107 3/8	114	120	126	132	138	145 3/8
37	80.0	80.0	80.0	80.0	80.0	80.0	80.0	80.0	80.0	80.0	80.0	80.0	80.0	80.0	80.0	80.0	80.0	80.0
42 3/4	80.0	80.0	80.0	80.0	80.0	80.0	80.0	80.0	80.0	80.0	80.0	80.0	80.0	80.0	80.0	80.0	80.0	80.0
48 3/4	80.0	80.0	80.0	80.0	80.0	80.0	80.0	80.0	80.0	80.0	80.0	80.0	80.0	80.0	80.0	80.0	80.0	65.0
53 1/8	80.0	80.0	80.0	80.0	80.0	80.0	80.0	80.0	80.0	80.0	80.0	80.0	80.0	80.0	80.0	65.0	65.0	65.0
57	80.0	80.0	80.0	80.0	80.0	80.0	80.0	80.0	80.0	80.0	80.0	80.0	80.0	65.0	65.0	65.0		
63	80.0	80.0	80.0	80.0	80.0	80.0	80.0	80.0	78.9	76.6	74.8	72.5	65.0	65.0				
65	65.0	65.0	65.0	65.0	65.0	65.0	65.0	65.0	65.0	65.0	65.0	65.0	65.0					
68	65.0	65.0	65.0	65.0	65.0	65.0	65.0	65.0	65.0	65.0	65.0	63.5						
72	65.0	65.0	65.0	65.0	65.0	65.0	65.0	64.9	61.7	59.1	56.9	53.7						

DP CHART IS FOR:
NON-INTERSECTED IMPACT 3" MULLION 1758, HORIZONTAL OR VERTICAL, USING (PER END):

1522 CLIPS
- (4) #10 SCREWS INTO WOOD or METAL
- (4) 3/16" ITW TAPCONS or DEWALT ULTRACON+ INTO SOLID CONCRETE or WOOD
- (4) 1/4" DEWALT ULTRACON+ INTO HOLLOW or GROUT-FILLED BLOCK

Design Pressure Chart (PSF) for NON-INTERSECTED Impact PVC 3" Mullion H-1758, with 1776 clips with six (6) #10 Screws into WOOD or METAL or 3/16" ITW Tapcons or DEWALT ULTRACON+ into SOLID CONCRETE or WOOD per each end of mullion. HOLLOW or GROUT-FILLED BLOCK require 1/4" DEWALT ULTRACON+.

MULL LENGTH (in.)	OPENING SIZE (in.)																	
	39	45	51	57	63	69	75 3/8	81	87	93	99	107 3/8	114	120	126	132	138	145 3/8
37	80.0	80.0	80.0	80.0	80.0	80.0	80.0	80.0	80.0	80.0	80.0	80.0	80.0	80.0	80.0	80.0	80.0	80.0
42 3/4	80.0	80.0	80.0	80.0	80.0	80.0	80.0	80.0	80.0	80.0	80.0	80.0	80.0	80.0	80.0	80.0	80.0	80.0
48 3/4	80.0	80.0	80.0	80.0	80.0	80.0	80.0	80.0	80.0	80.0	80.0	80.0	80.0	80.0	80.0	80.0	80.0	65.0
53 1/8	80.0	80.0	80.0	80.0	80.0	80.0	80.0	80.0	80.0	80.0	80.0	80.0	80.0	80.0	80.0	65.0	65.0	65.0
57	80.0	80.0	80.0	80.0	80.0	80.0	80.0	80.0	80.0	80.0	80.0	80.0	80.0	65.0	65.0	65.0		
63	80.0	80.0	80.0	80.0	80.0	80.0	80.0	80.0	80.0	80.0	80.0	80.0	65.0	65.0				
65	65.0	65.0	65.0	65.0	65.0	65.0	65.0	65.0	65.0	65.0	65.0	65.0	65.0					
68	65.0	65.0	65.0	65.0	65.0	65.0	65.0	65.0	65.0	65.0	65.0	65.0						
72	65.0	65.0	65.0	65.0	65.0	65.0	65.0	64.9	61.7	59.1	56.9	53.7						

DP CHART IS FOR:
NON-INTERSECTED IMPACT 3" MULLION 1758, HORIZONTAL OR VERTICAL, USING (PER END):

1776 CLIPS
- (6) #10 SCREWS INTO WOOD or METAL
- (6) 3/16" ITW TAPCONS or DEWALT ULTRACON+ INTO SOLID CONCRETE or WOOD
- (6) 1/4" DEWALT ULTRACON+ INTO HOLLOW or GROUT-FILLED BLOCK

NOTES:
1. THE MULL BAR IN FOCUS FOR ANY GIVEN CONFIGURATION IS SHOWN IN BOLD.
2. AN INTERSECTED MULL BAR HAS OTHER MULL BAR(S) ATTACHED TO IT (SHOWN IN DASHES) THROUGH THE USE OF MULL BAR CLIPS. AN INTERSECTED MULL BAR WILL ALWAYS BE ATTACHED TO THE SUBSTRATE AT BOTH ENDS.
3. NON-INTERSECTED MULL BARS CAN BE ATTACHED TO THE SUBSTRATE AND OTHER MULL BARS.

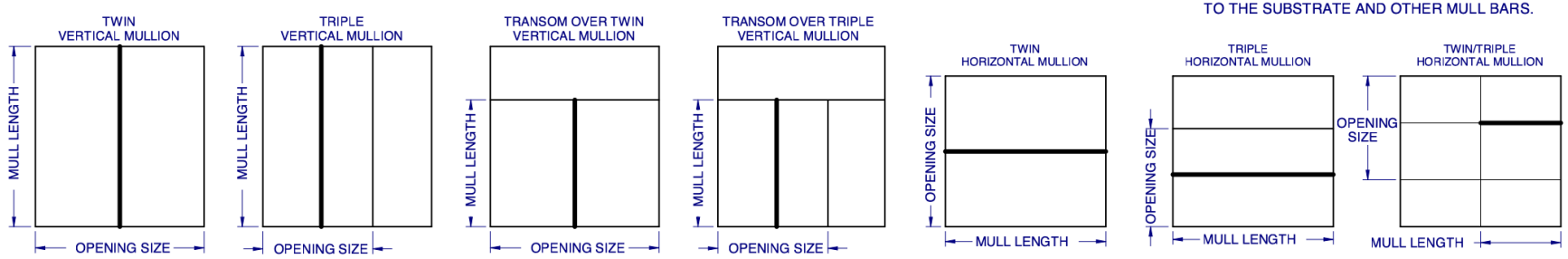

Pella Corporation
102 Main Street
Pella, IA 50219
www.pella.com

3" PVC MULL BAR IMPACT

PROPRIETARY AND CONFIDENTIAL
THE INFORMATION CONTAINED IN THIS DRAWING IS THE SOLE PROPERTY OF CUSTOM WINDOW SYSTEMS, INC. ANY REPRODUCTION IN PART OR AS A WHOLE WITHOUT THE WRITTEN PERMISSION OF CUSTOM WINDOW SYSTEMS, INC IS PROHIBITED.

FLORIDA APPROVAL NO.:
33622

LUCAS A. TURNER
LICENSE
No. 58201
STATE OF FLORIDA
PROFESSIONAL ENGINEER

10/11/2023

LUCAS A. TURNER, P.E.
FL PE # 58201
Turner Engineering & Consulting, Inc.
2428 Old Natchez Trc Trl
Camden, TN 38320
PH. 941-380-1574

SHEET DESCRIPTION:
DP CHARTS NON-INTERSECTED MULLS

DRAWN BY:	DATE:
MCS	10/3/2023
DWG #: PEL-836	REV.: A
SCALE: 1:1	SHEET 2 OF 10

Design Pressure Chart (PSF) for INTERSECTED Impact PVC 3" Mullion H-1758, with 1522 clips using four (4) #10 Screws into WOOD or METAL or 3/16" ITW Tapcons into SOLID CONCRETE or WOOD, or 1776 clips with six (6) #10 Screws into WOOD or METAL or 3/16" ITW Tapcons into SOLID CONCRETE or WOOD per each end of mullion. HOLLOW or GROUT-FILLED BLOCK require 1/4" DEWALT ULTRACON+.

MULL LENGTH (in.)	OPENING SIZE (in.)																	
	39	45	51	57	63	69	75 3/8	81	87	93	99	110 3/8	114	120	126	132	138	145 3/8
37	50.0	50.0	50.0	50.0	50.0	50.0	50.0	50.0	50.0	50.0	50.0	50.0	50.0	50.0	50.0	50.0	50.0	50.0
42 3/4	50.0	50.0	50.0	50.0	50.0	50.0	50.0	50.0	50.0	50.0	50.0	50.0	50.0	50.0	50.0	50.0	50.0	50.0
48 3/4	50.0	50.0	50.0	50.0	50.0	50.0	50.0	50.0	50.0	50.0	50.0	50.0	50.0	50.0	50.0	50.0	50.0	50.0
53 1/8	50.0	50.0	50.0	50.0	50.0	50.0	50.0	50.0	50.0	50.0	50.0	50.0	50.0	50.0	50.0	50.0	50.0	50.0
57	50.0	50.0	50.0	50.0	50.0	50.0	50.0	50.0	50.0	50.0	50.0	50.0	50.0	50.0	50.0	50.0	50.0	48.1
63	50.0	50.0	50.0	50.0	50.0	50.0	50.0	50.0	50.0	50.0	50.0	50.0	50.0	50.0	49.4	47.3		
68	50.0	50.0	50.0	50.0	50.0	50.0	50.0	50.0	50.0	50.0	50.0	50.0	49.8	47.6				
72	50.0	50.0	50.0	50.0	50.0	50.0	50.0	50.0	50.0	50.0	50.0	45.4	44.0					
75.375	50.0	50.0	50.0	50.0	50.0	50.0	50.0	50.0	50.0	46.8	44.0	40.0						

DP CHART IS FOR:
INTERSECTED IMPACT 3" MULLION 1758, HORIZONTAL OR VERTICAL, USING EITHER (PER END):

1522 CLIPS
- (4) #10 SCREWS INTO WOOD or METAL
- (4) 3/16" ITW TAPCONS or DEWALT ULTRACON+ INTO SOLID CONCRETE or WOOD
- (4) 1/4" DEWALT ULTRACON+ INTO HOLLOW or GROUT-FILLED BLOCK

1767 CLIPS
- (6) #10 SCREWS INTO WOOD or METAL
- (6) 3/16" ITW TAPCONS or DEWALT ULTRACON+ INTO SOLID CONCRETE or WOOD
- (6) 1/4" DEWALT ULTRACON+ INTO HOLLOW or GROUT-FILLED BLOCK

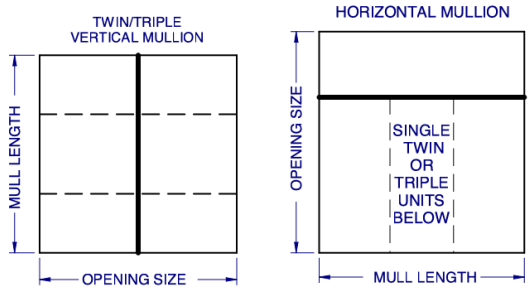

NOTES:
1. THE MULL BAR IN FOCUS FOR ANY GIVEN CONFIGURATION IS SHOWN IN BOLD.
2. AN INTERSECTED MULL BAR HAS OTHER MULL BAR(S) ATTACHED TO IT (SHOWN IN DASHES) THROUGH THE USE OF MULL BAR CLIPS. AN INTERSECTED MULL BAR WILL ALWAYS BE ATTACHED TO THE SUBSTRATE AT BOTH ENDS.
3. NON-INTERSECTED MULL BARS CAN BE ATTACHED TO THE SUBSTRATE AND OTHER MULL BARS.

Pella Corporation
102 Main Street
Pella, IA 50219
www.pella.com

3" PVC MULL BAR IMPACT

PROPRIETARY AND CONFIDENTIAL
THE INFORMATION CONTAINED IN THIS DRAWING IS THE SOLE PROPERTY OF CUSTOM WINDOW SYSTEMS, INC. ANY REPRODUCTION IN PART OR AS A WHOLE WITHOUT THE WRITTEN PERMISSION OF CUSTOM WINDOW SYSTEMS, INC IS PROHIBITED.

FLORIDA APPROVAL NO.:
33622

LUCAS A. TURNER
LICENSE
No. 58201
STATE OF FLORIDA
PROFESSIONAL ENGINEER

10/11/2023

LUCAS A. TURNER, P.E.
FL PE # 58201
Turner Engineering & Consulting, Inc.
2428 Old Natchez Trc Trl
Camden, TN 38320
PH. 941-380-1574

SHEET DESCRIPTION:
DP CHART
INTERSECTED MULLS

DRAWN BY:	DATE:
MCS	10/3/2023
DWG #: PEL-836	REV.: A
SCALE: 1:1	SHEET 3 OF 10

ITEM	PART #	DESCRIPTION
1	H-1758	1 3/8" x 3" MULLION TUBE
2		#10 OR #12 HEX WASHER HEAD TEK SCREW *(see note below)
3		#10 x 1 1/2", PANHEAD PHILIPS ZINC
4		#10 FLAT WASHER
7	S-1897	MULLION CLIP, INTERSECTING
8		SEALANT
9	S-1895	DRIP CAP, HORZ, FLG
10	S-1896	FLANGE ADAPTER, VERT, FLG
11	S-6018	MULLION INTERIOR COVER, EXT, FIN/BOX
14	F-1522-013	3" SLOTTED NEW CONTRUCTION FIN MULL CLIP
15	F-1522-006	3" SLOTTED T-CLIP, FLG/BOX
16	F-1767-001	L-ANGLE 3" MULL CLIP, STANDARD, FLG/BOX
17	F-1767-004L	L-ANGLE 3" MULL CLIP, FIN, LEFT
18	F-1767-004R	L-ANGLE 3" MULL CLIP, FIN, RIGHT
19		#10 HEX WASHER HEAD TEK SCREW
20		#10 FH TEK SCREW

* USE WOOD SCREW SIZE (#10 OR #12), SPECIFIED IN WINDOW UNIT APPROVAL DOCUMENT

LINE ITEMS NOT USED:
5-6, 12

FRAME TYPE	OPENING	"T" MULLBAR CLIP (F-1522-XXX)	"L" MULLBAR CLIP (F-1767-XXX)
FLANGE	NEW	F-1522-013	F-1767-001
	RETRO	F-1522-006	F-1767-001
FIN	NEW	F-1522-013	F-1767-004(L&R)
	RETRO	F-1522-013	F-1767-004(L&R)
BOX	NEW	NOT RECOMMENDED	F-1767-001
	RETRO	F-1522-006	F-1767-001

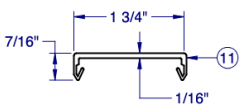

MULLION INTERIOR COVER S-6018

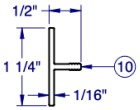

FLANGE ADAPTER S-1896

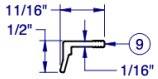

DRIP CAP S-1895

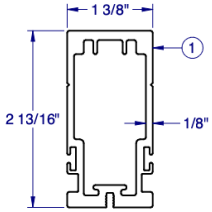

3" MULLBAR H-1758

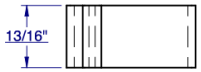

TOP VIEW

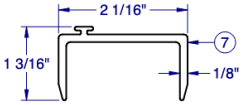

MULLION CLIP S-1897

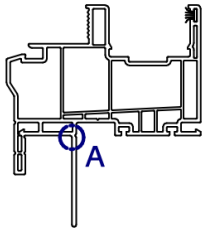

TYP. FIN FRAME

SCORE, BEND AND BREAK TO REMOVE FIN FOR FRAME ATTACHMENT TO MULL BAR

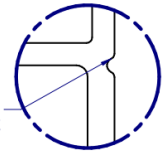

DETAIL A
3:1

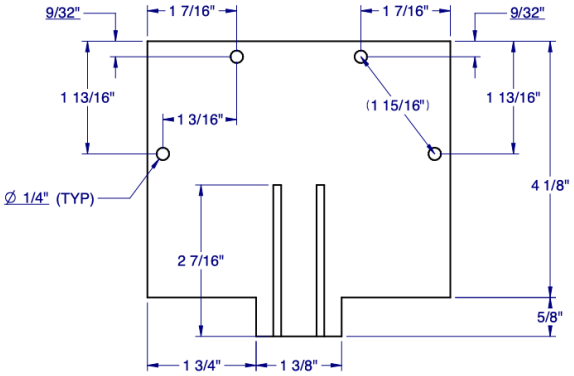

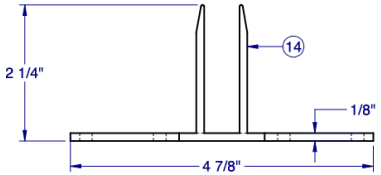

F- 1522 - 013
NEW CONSTRUCTION / FIN INSTALLATION

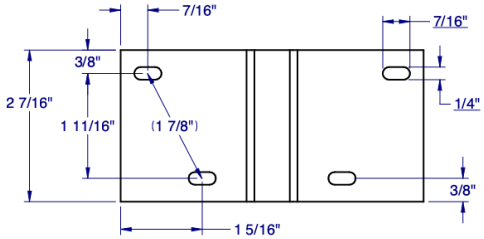

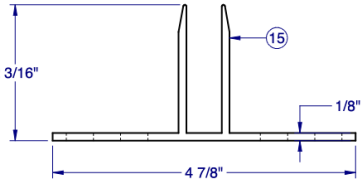

F-1522-006
RETRO / FLANGE CLIP

NOTE: ALL EXTRUSIONS ARE ALUMINUM 6063-T6 UNLESS OTHERWISE NOTED.

Pella Corporation
102 Main Street
Pella, IA 50219
www.pella.com

3" PVC MULL BAR IMPACT

PROPRIETARY AND CONFIDENTIAL
THE INFORMATION CONTAINED IN THIS DRAWING IS THE SOLE PROPERTY OF CUSTOM WINDOW SYSTEMS, INC. ANY REPRODUCTION IN PART OR AS A WHOLE WITHOUT THE WRITTEN PERMISSION OF CUSTOM WINDOW SYSTEMS, INC IS PROHIBITED.

FLORIDA APPROVAL NO.:
33622

10/11/2023

LUCAS A. TURNER, P.E.
FL PE # 58201
Turner Engineering & Consulting, Inc.
2428 Old Natchez Trc Trl
Camden, TN 38320
PH. 941-380-1574

SHEET DESCRIPTION:
BOM AND EXTRUSIONS

DRAWN BY:	DATE:
MCS	10/3/2023
DWG #: PEL-836	REV.: A
SCALE: 1:2	SHEET 4 OF 10

FRAME TYPE	OPENING	"T" MULLBAR CLIP (F-1522-XXX)	"L" MULLBAR CLIP (F-1767-XXX)
FLANGE	NEW	F-1522-013	F-1767-001
	RETRO	F-1522-006	F-1767-001
FIN	NEW	F-1522-013	F-1767-004(L&R)
	RETRO	F-1522-013	F-1767-004(L&R)
BOX	NEW	NOT RECOMMENDED	F-1767-001
	RETRO	F-1522-006	F-1767-001

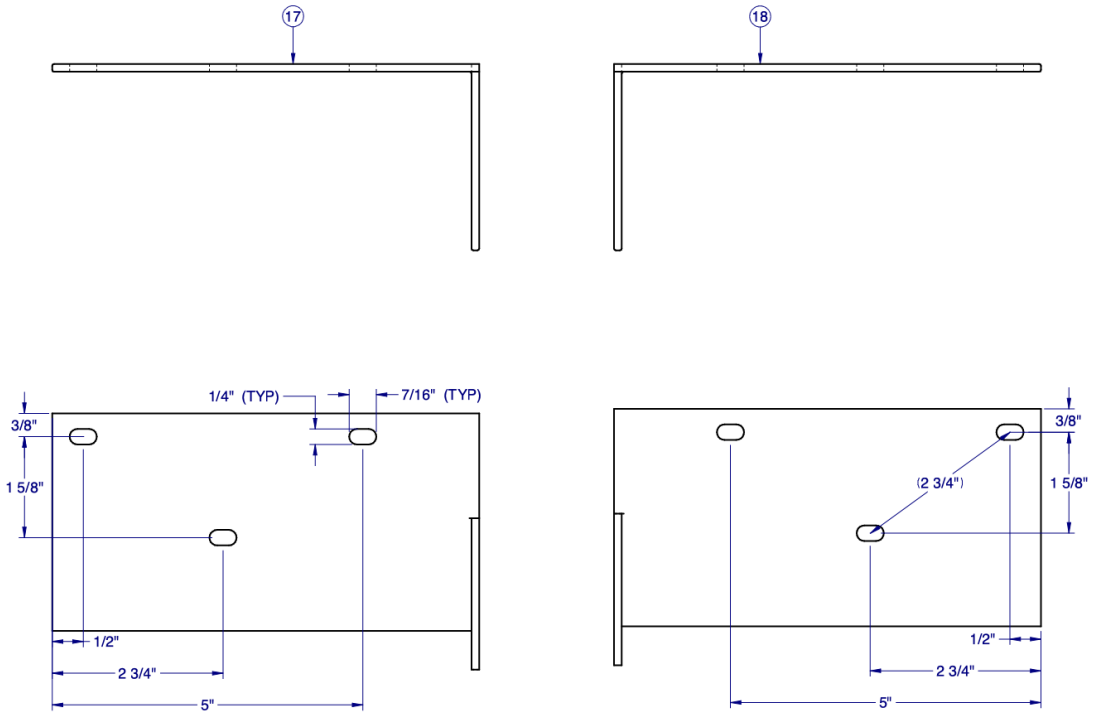

"L" ANGLE 3" MULL CLIP, FIN (LEFT) F-1767-004L

"L" ANGLE 3" MULL CLIP, FIN (RIGHT) F-1767-004R

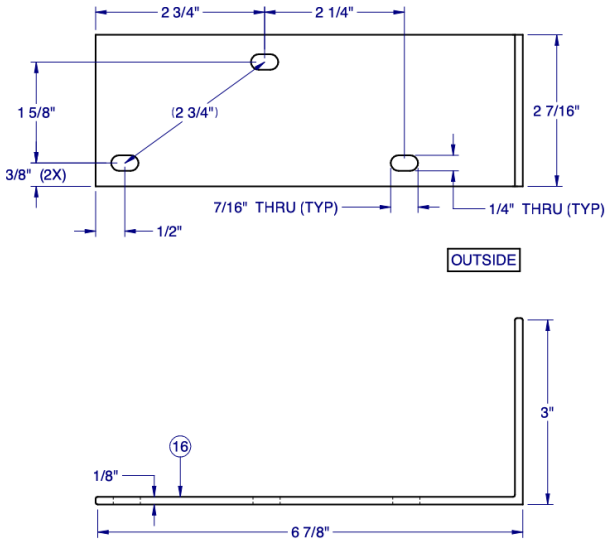

"L" ANGLE 3" STANDARD MULL CLIP - F-1767-001

Pella Corporation
102 Main Street
Pella, IA 50219
www.pella.com

3" PVC MULL BAR IMPACT

PROPRIETARY AND CONFIDENTIAL
THE INFORMATION CONTAINED IN THIS DRAWING IS THE SOLE PROPERTY OF CUSTOM WINDOW SYSTEMS, INC. ANY REPRODUCTION IN PART OR AS A WHOLE WITHOUT THE WRITTEN PERMISSION OF CUSTOM WINDOW SYSTEMS, INC IS PROHIBITED.

FLORIDA APPROVAL NO.:
33622

LUCAS A. TURNER LICENSE No. 58201 STATE OF FLORIDA PROFESSIONAL ENGINEER

10/11/2023

LUCAS A. TURNER, P.E.
FL PE # 58201
Turner Engineering & Consulting, Inc.
2428 Old Natchez Trc Trl
Camden, TN 38320
PH. 941-380-1574

SHEET DESCRIPTION:
EXTRUSIONS

DRAWN BY:	DATE:
MCS	10/3/2023
DWG #: PEL-836	REV.: A
SCALE: 1:2	SHEET 5 OF 10

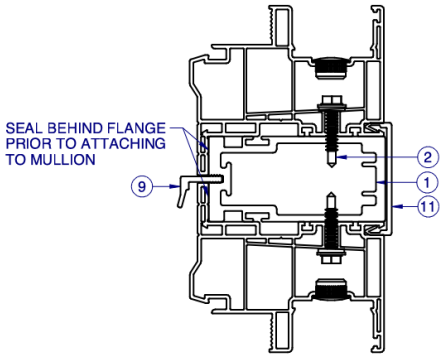

A/6 HORIZONTAL MULL BAR SECTION FLANGE FRAME WINDOW

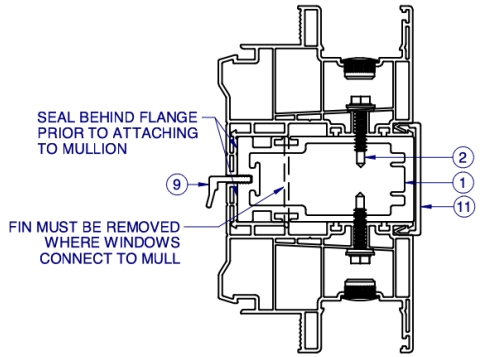

A/6 HORIZONTAL MULL BAR SECTION FIN FRAME WINDOW

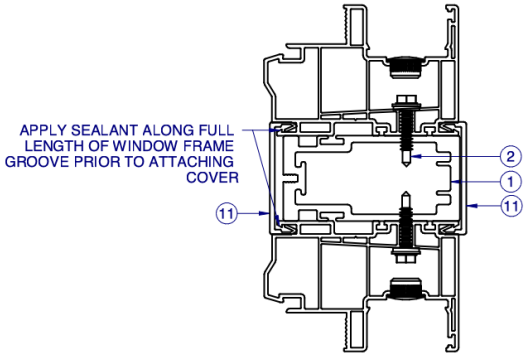

A/6 VERTICAL/HORIZONTAL MULL BAR SECTION BOX FRAME WINDOW

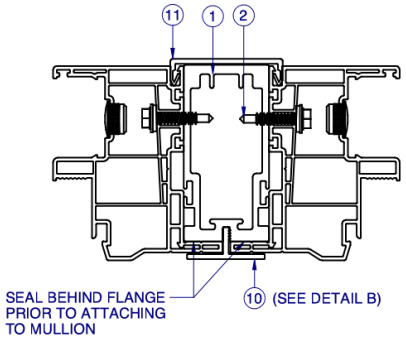

B/6 VERTICAL MULL BAR SECTION FLANGE FRAME WINDOW

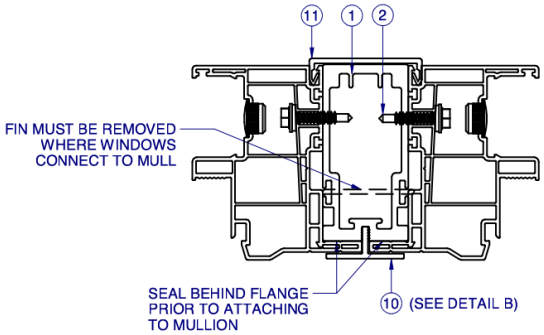

B/6 VERTICAL MULL BAR SECTION FIN FRAME WINDOW

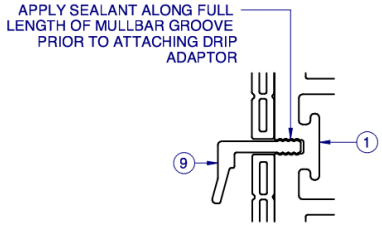

DETAIL A

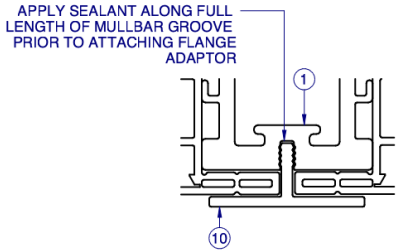

DETAIL B

Pella Corporation
102 Main Street
Pella, IA 50219
www.pella.com

3" PVC MULL BAR IMPACT

PROPRIETARY AND CONFIDENTIAL
THE INFORMATION CONTAINED IN THIS DRAWING IS THE SOLE PROPERTY OF CUSTOM WINDOW SYSTEMS, INC. ANY REPRODUCTION IN PART OR AS A WHOLE WITHOUT THE WRITTEN PERMISSION OF CUSTOM WINDOW SYSTEMS, INC IS PROHIBITED.

FLORIDA APPROVAL NO.:
33622

10/11/2023

LUCAS A. TURNER, P.E.
FL PE # 58201
Turner Engineering & Consulting, Inc.
2428 Old Natchez Trc Trl
Camden, TN 38320
PH. 941-380-1574

SHEET DESCRIPTION:
SECTION VIEWS MULLS

DRAWN BY:	DATE:
MCS	10/3/2023
DWG #: PEL-836	REV.: A
SCALE: 1:2	SHEET 6 OF 10

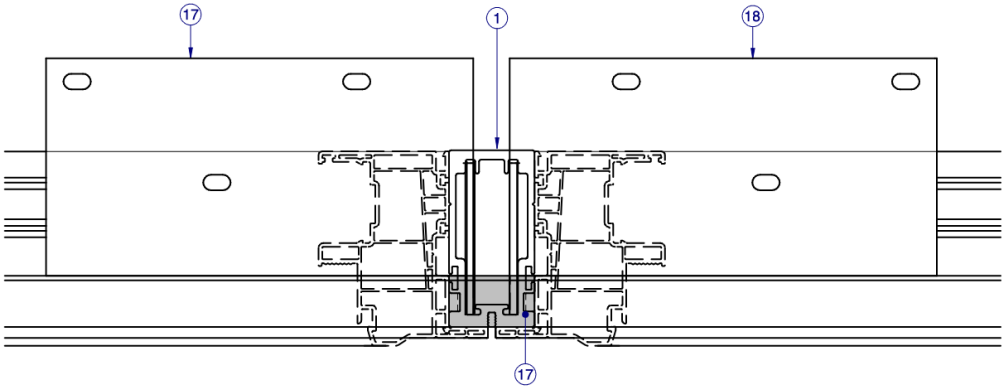

TOP VIEW
FIN FRAME

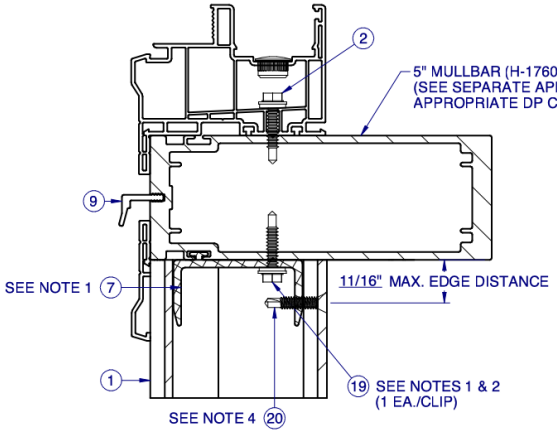

C/7 5" HORIZ. TO 3" VERT. MULLBAR SECTION
FLANGE FRAME WINDOW

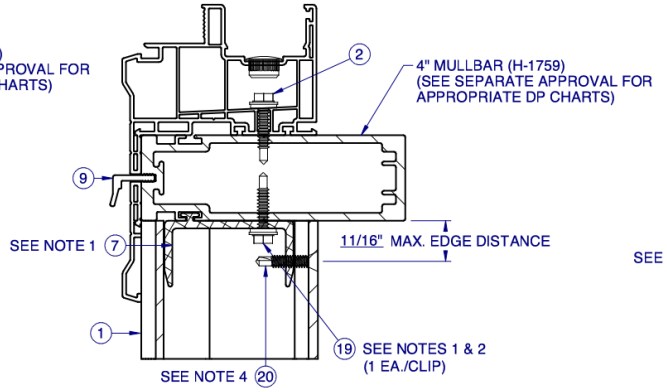

C/7 4" HORIZ. TO 3" VERT. MULLBAR SECTION
FLANGE FRAME WINDOW

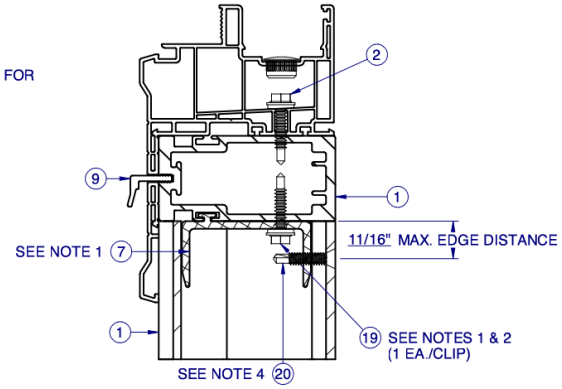

C/7 3" HORIZ. TO 3" VERT. MULLBAR SECTION
FLANGE FRAME WINDOW

NOTES:

1. SLIDE CLIP INTO LOCATION AND SECURE WITH ITEMS 19 (QTY 1) AND 20 (QTY 1), AS SHOWN ABOVE.
2. PRE-DRILLED HOLES (THRU H/V CLIP 1897), BY THE INSTALLER, MAY BE LOCATED AS NEEDED WHILE MAINTAINING A MINIMUM CLIP EDGE DISTANCE OF 9/32" AND A MINIMUM CENTER TO CENTER SPACING OF 1/2".
3. THE ABOVE SECTIONS APPLY TO ALL MULLBAR-TO-MULLBAR CONNECTIONS, REGARDLESS OF ORIENTATION (i.e., HORIZONTAL OR VERTICAL). THE FULL LENGTH MULL MUST BE THE SAME DEPTH, OR GREATER, THAN THE INTERSECTING MULL.
4. INTERIOR MULL ANCHOR ATTACHMENT SCREW THRU VERTICAL MULL INTO MULL CLIP. PRE-DRILL PILOT HOLE THRU ALL MATERIAL.

Pella Corporation
102 Main Street
Pella, IA 50219
www.pella.com

3" PVC MULL BAR IMPACT

PROPRIETARY AND CONFIDENTIAL
THE INFORMATION CONTAINED IN THIS DRAWING IS THE SOLE PROPERTY OF CUSTOM WINDOW SYSTEMS, INC. ANY REPRODUCTION IN PART OR AS A WHOLE WITHOUT THE WRITTEN PERMISSION OF CUSTOM WINDOW SYSTEMS, INC IS PROHIBITED.

FLORIDA APPROVAL NO.:
33622

10/11/2023

LUCAS A. TURNER, P.E.
FL PE # 58201
Turner Engineering & Consulting, Inc.
2428 Old Natchez Trc Trl
Camden, TN 38320
PH. 941-380-1574

SHEET DESCRIPTION:
SECTION VIEWS
MULL INTERSECTIONS

DRAWN BY:	DATE:
MCS	10/3/2023
DWG #:	REV.:
PEL-836	A
SCALE:	SHEET
1:2	7 OF 10

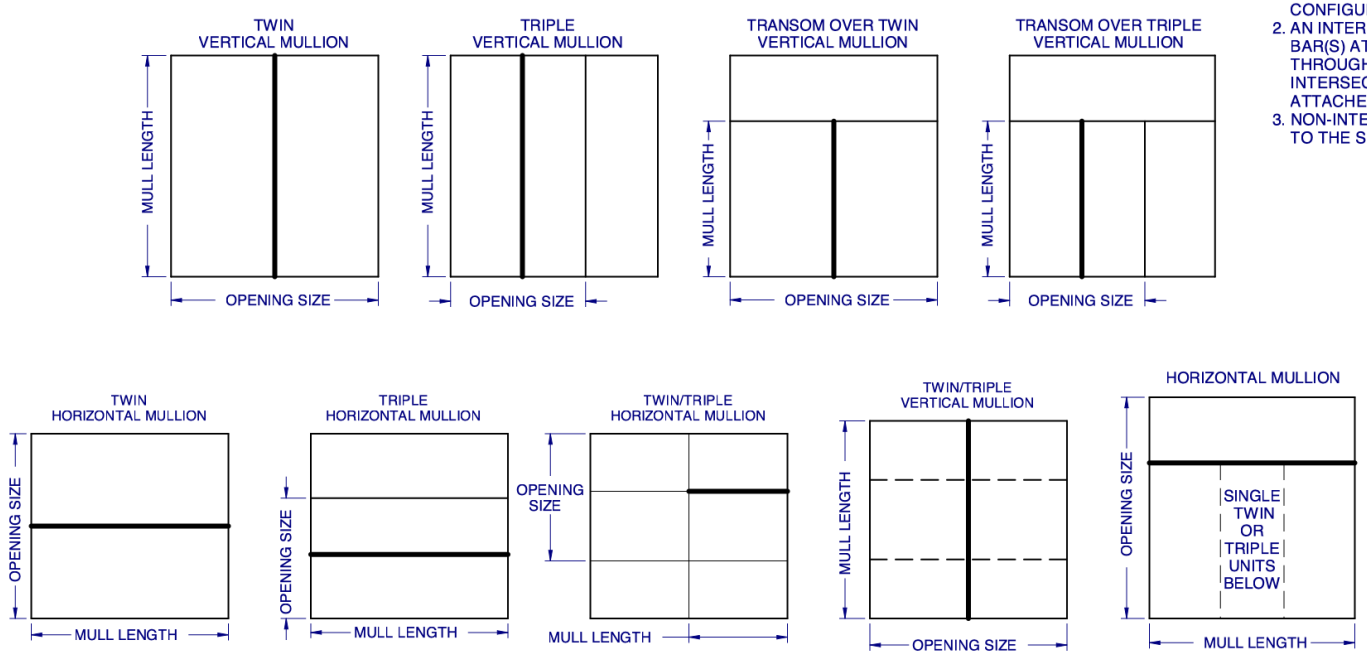

NOTES:
1. THE MULL BAR IN FOCUS FOR ANY GIVEN CONFIGURATION IS SHOWN IN BOLD.
2. AN INTERSECTED MULL BAR HAS OTHER MULL BAR(S) ATTACHED TO IT (SHOWN IN DASHES) THROUGH THE USE OF MULL BAR CLIPS. AN INTERSECTED MULL BAR WILL ALWAYS BE ATTACHED TO THE SUBSTRATE AT BOTH ENDS.
3. NON-INTERSECTED MULL BARS CAN BE ATTACHED TO THE SUBSTRATE AND OTHER MULL BARS.

NOTES:

1. AT MULLION LOCATION, ATTACH WINDOW UNIT(S) TO MULLBAR THRU FRAME AS SPECIFIED IN WINDOW UNIT APPROVAL DOCUMENTS. IF ALUMINUM ATTACHMENT IS NOT SPECIFIED IN THE WINDOW UNIT APPROVAL DOCUMENTS, FOLLOW THE ANCHOR SPACING AS INDICATED IN THE WINDOW APPROVAL FOR ATTACHMENT TO WOOD SUBSTRATE, USING A HEX WASHER HEAD TEK SCREW OF THE SAME SIZE (#10 OR #12) AS THE WOOD SCREW INDICATED IN THE WINDOW APPROVAL. TEK SCREWS SHALL BE LONG ENOUGH TO ENSURE THREE (3) THREADS OF PENETRATION BEYOND THE INSIDE WALL OF MULLBAR.
2. MULL CLIP INSTALLATION ANCHOR TYPE, SIZE, SPACING AND EMBEDMENT SHALL BE AS SPECIFIED IN THESE DRAWINGS, SEE TABLE 1, SHEET 9.
3. ALL MULL CLIP INSTALLATION ANCHORS MUST BE MADE OF OR PROTECTED WITH A CORROSION RESISTANT MATERIAL OR COATING. DISSIMILAR METALS OR MATERIALS IN CONTACT WITH PRESSURE TREATED WOOD MUST BE PROTECTED TO PREVENT REACTION.
4. INSTALLATION ANCHORS SHALL BE IN ACCORDANCE WITH ANCHOR MANUFACTURER'S INSTALLATION INSTRUCTIONS, AND ANCHORS SHALL NOT BE USED IN SUBSTRATES WITH STRENGTHS LESS THAN THE MINIMUM SPECIFIED IN TABLE 1, SHEET 9.
5. ANCHOR EMBEDMENT TO SUBSTRATE SHALL BE BEYOND WALL DRESSING OR STUCCO. FOR CONCRETE/CMU OPENINGS, EMBEDMENT SHALL BE BEYOND WOOD BUCKS, IF USED, INTO SUBSTRATE - 1X BUCKS ARE OPTIONAL.
6. A MINIMUM CENTER-TO-CENTER SPACING SHALL BE MAINTAINED AS INDICATED BY THE PRE-DRILLED HOLES AS SHOWN IN THE CLIP LAYOUTS ON SHEETS 4-5.
7. WOOD OR MASONRY OPENINGS, BUCKS AND BUCK FASTENERS SHALL BE PROPERLY DESIGNED BY THE ARCHITECT OR ENGINEER OF RECORD AND INSTALLED TO TRANSFER WIND LOADS TO THE STRUCTURE. SUBSTRATES SHALL MEET THE MINIMUM STRENGTH REQUIREMENTS AS SHOWN IN TABLE1, SHEET 9. CONCRETE AND MASONRY SUBSTRATES MAY NOT BE CRACKED.
8. SEALING AND FLASHING STRATEGIES FOR OVERALL WATER RESISTANCE OF INSTALLATION SHALL BE DONE BY OTHERS FOLLOWING THE CURRENT VERSION OF THE REFERENCE DOCUMENTS: FMA/AAMA 100(FIN WINDOWS), FMA/AAMA 200(FLANGE WINDOWS), FMA/WDMA 250(BOX WINDOWS), FMA/AAMA/WDMA 300(EXTERIOR DOORS)

Pella Corporation
102 Main Street
Pella, IA 50219
www.pella.com

3" PVC MULL BAR IMPACT

PROPRIETARY AND CONFIDENTIAL
THE INFORMATION CONTAINED IN THIS DRAWING IS THE SOLE PROPERTY OF CUSTOM WINDOW SYSTEMS, INC. ANY REPRODUCTION IN PART OR AS A WHOLE WITHOUT THE WRITTEN PERMISSION OF CUSTOM WINDOW SYSTEMS, INC IS PROHIBITED.

FLORIDA APPROVAL NO.:
33622

LUCAS A. TURNER
LICENSE
No. 58201
STATE OF FLORIDA
PROFESSIONAL ENGINEER

10/11/2023

LUCAS A. TURNER, P.E.
FL PE # 58201
Turner Engineering & Consulting, Inc.
2428 Old Natchez Trc Trl
Camden, TN 38320
PH. 941-380-1574

SHEET DESCRIPTION:
CONFIGURATIONS AND ANCHORAGE NOTES

DRAWN BY:	DATE:
MCS	10/3/2023
DWG #: PEL-836	REV.: A
SCALE: 1:1	SHEET 8 OF 10

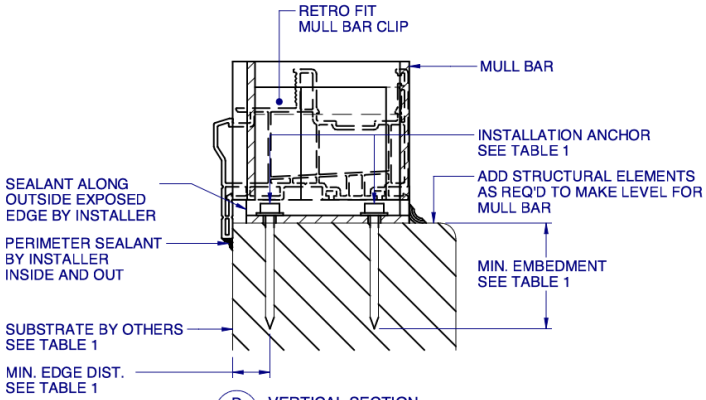

D / 9 VERTICAL SECTION
TYPICAL FLANGE (RETRO FIT) ANCHORAGE
HEAD AND JAMBS SIMILAR FOR FLANGE INSTALLATION

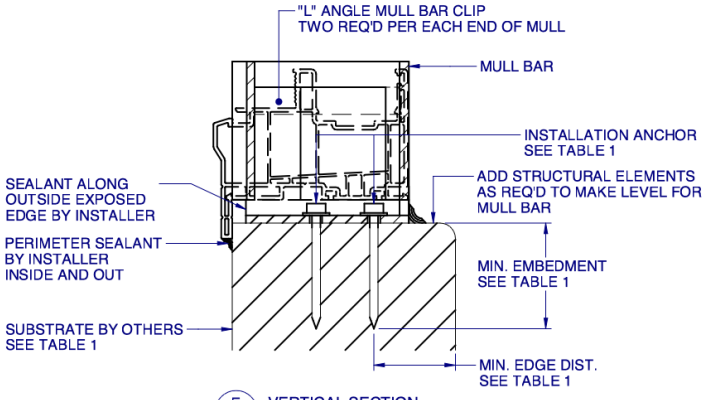

E / 9 VERTICAL SECTION
TYPICAL FLANGE ("L" ANGLE) ANCHORAGE
HEAD AND JAMBS SIMILAR FOR FLANGE INSTALLATION

TABLE 1: APPROVED MULL CLIP INSTALLATION FASTENERS

SUBSTRATE TYPE	ANCHOR TYPE	MIN. EMBEDMENT	MIN. EDGE DIST.
CONCRETE (2.0 KSI MIN.)	3/16" ITW TAPCON	1"	3"
CONCRETE (3.05 KSI MIN.)	3/16" DEWALT ULTRACON+	1-3/4"	1"
HOLLOW or GROUT-FILLED CMU (ASTM C-90)	1/4" DEWALT ULTRACON+	1-1/4"	2-1/2"
2X MIN. SOUTHERN PINE (G=0.55)	3/16" ITW TAPCON OR DEWALT ULTRACON+	1-3/8"	7/8"
2X MIN. SOUTHERN PINE (G=0.55)	#10 WOOD SCREW	1-3/8"	7/8"
16 GAUGE (0.060") MIN. STEEL STUD (33 KSI YIELD MIN)	#10-16 HILTI KWIK-FLEX OR ITW TEKS SELF-DRILLING SCREW	FULL THREAD THRU 0.060"	7/16"
1/8" ALUM. (6063-T5 MIN.) OR 1/8" STEEL (33 KSI MIN.)	#10 GRADE 5 SELF-TAPPING / DRILLING SCREW	FULL THREAD THRU 0.125"	7/16"

NOTES:

1. BOX FRAME MULL INSTALLATION SIMILAR TO FLANGE FRAME.
2. SILL STOOL MUST BE FLUSH AGAINST INSIDE OF MULLED WINDOWS AFTER INSTALLATION.
3. RECESS RETRO MULLION CLIP 3/8" MAX. FOR CLEARANCE OF WINDOW UNIT AS NEEDED.
4. FOUR (4) ANCHORS REQUIRED PER "T" MULL CLIP, SEE SHEETS 2-3. THREE (3) ANCHORS REQUIRED PER "L" MULL CLIP, SEE SHEETS 2-3.
5. SEAT MULLION TIGHT TO MULL CLIP.
6. FOR ANCHORAGE DETAILS FOR THE WINDOW, REFER TO THE WINDOW SPECIFIC INSTALLATION DETAILS.

Pella Corporation
102 Main Street
Pella, IA 50219
www.pella.com

3" PVC MULL BAR IMPACT

PROPRIETARY AND CONFIDENTIAL
THE INFORMATION CONTAINED IN THIS DRAWING IS THE SOLE PROPERTY OF CUSTOM WINDOW SYSTEMS, INC. ANY REPRODUCTION IN PART OR AS A WHOLE WITHOUT THE WRITTEN PERMISSION OF CUSTOM WINDOW SYSTEMS, INC IS PROHIBITED.

FLORIDA APPROVAL NO.:
33622

10/11/2023

LUCAS A. TURNER, P.E.
FL PE # 58201
Turner Engineering & Consulting, Inc.
2428 Old Natchez Trc Trl
Camden, TN 38320
PH. 941-380-1574

SHEET DESCRIPTION:
INSTALLATION DETAILS FLANGE

DRAWN BY:	DATE:
MCS	10/3/2023
DWG #: PEL-836	REV.: A
SCALE: 1:2	SHEET 9 OF 10

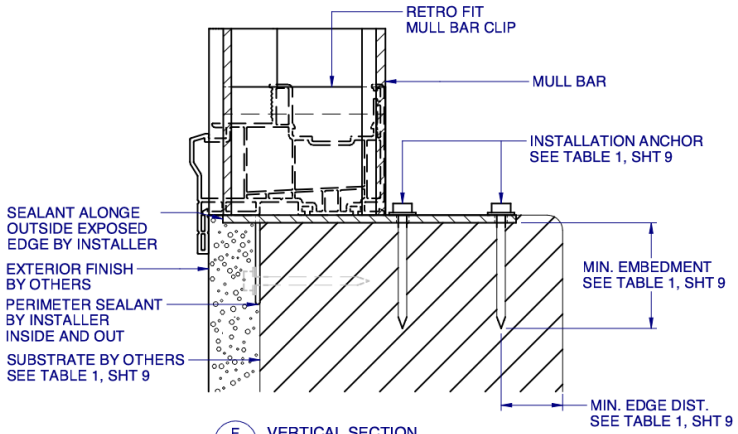

F / 10 VERTICAL SECTION
TYPICAL FIN (RETRO FIT) ANCHORAGE
HEAD AND JAMBS SIMILAR FOR FIN INSTALLATION

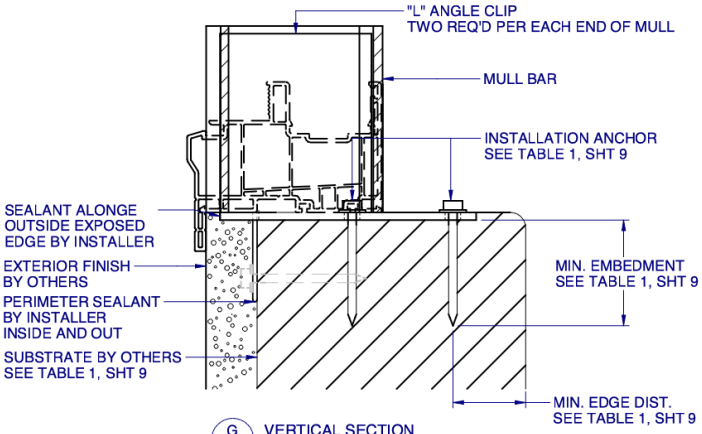

G / 10 VERTICAL SECTION
TYPICAL FIN ("L" ANGLE) ANCHORAGE
HEAD AND JAMBS SIMILAR FOR FIN INSTALLATION

NOTES:

1. SILL STOOL MUST BE FLUSH AGAINST INSIDE OF MULLED WINDOWS AFTER INSTALLATION.
2. RECESS RETRO MULLION CLIP 3/8" MAX. FOR CLEARANCE OF WINDOW UNIT AS NEEDED.
3. FOUR (4) ANCHORS REQUIRED PER "T" MULL CLIP, SEE SHEETS 2-3. THREE (3) ANCHORS REQUIRED PER "L" MULL CLIP, SEE SHEETS 2-3.
4. SEAT MULLION TIGHT TO MULL CLIP.
5. FOR ANCHORAGE DETAILS FOR THE WINDOW, REFER TO THE WINDOW SPECIFIC INSTALLATION DETAILS.

Pella Corporation
102 Main Street
Pella, IA 50219
www.pella.com

3" PVC MULL BAR IMPACT

PROPRIETARY AND CONFIDENTIAL
THE INFORMATION CONTAINED IN THIS DRAWING IS THE SOLE PROPERTY OF CUSTOM WINDOW SYSTEMS, INC. ANY REPRODUCTION IN PART OR AS A WHOLE WITHOUT THE WRITTEN PERMISSION OF CUSTOM WINDOW SYSTEMS, INC IS PROHIBITED.

FLORIDA APPROVAL NO.:
33622

10/11/2023

LUCAS A. TURNER, P.E.
FL PE # 58201
Turner Engineering & Consulting, Inc.
2428 Old Natchez Trc Trl
Camden, TN 38320
PH. 941-380-1574

SHEET DESCRIPTION:
INSTALLATION DETAILS FIN

DRAWN BY:	DATE:
MCS	10/3/2023
DWG #: PEL-836	REV.: A
SCALE: 1:2	SHEET 10 OF 10

413

VINYL SIDING

Aluminum Windows (front of house)

Wood Rotting

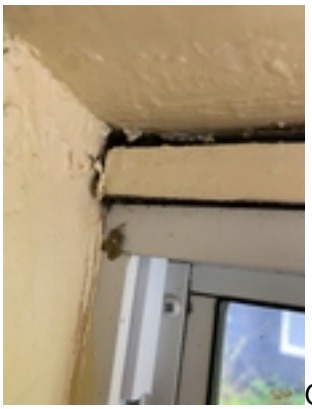
Gap between window frame and wall/ceiling
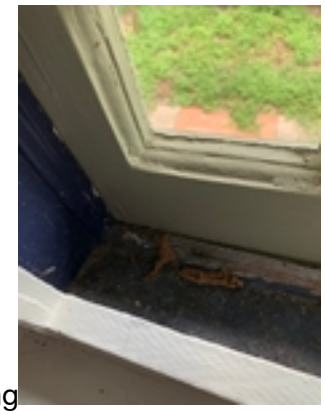

Temperature logs of extreme inefficiency

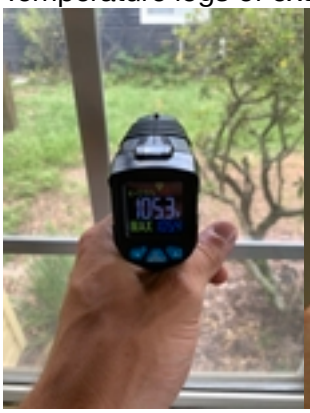

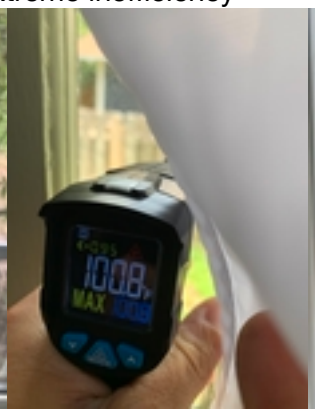

Broken pulley system showing windows are inoperable

Cracks in glass

MISC PHOTOS